December 2010

DIN EN 1998-1

DIN

ICS 91.010.30; 91.120.25

Supersedes
DIN EN 1998-1:2006-04;
together with
DIN EN 1998-5:2010-12,
supersedes
DIN 4149:2005-04

Eurocode 8: Design of structures for earthquake resistance – Part 1: General rules, seismic actions and rules for buildings (includes Corrigendum AC:2009) English translation of DIN EN 1998-1:2010-12

Eurocode 8: Auslegung von Bauwerken gegen Erdbeben –
Teil 1: Grundlagen, Erdbebeneinwirkungen und Regeln für Hochbauten
(enthält Berichtigung AC:2009)
Englische Übersetzung von DIN EN 1998-1:2010-12

Eurocode 8: Calcul des structures pour leur résistance aux séismes –
Partie 1: Règles générales, actions sismiques et règles pour les bâtiments
(Corrigendum AC:2009 inclus)
Traduction anglaise de DIN EN 1998-1:2010-12

Document comprises 233 pages

Translation by DIN-Sprachendienst.
In case of doubt, the German-language original shall be considered authoritative.

© No part of this translation may be reproduced without prior permission of
DIN Deutsches Institut für Normung e. V., Berlin. Beuth Verlag GmbH, 10772 Berlin, Germany,
has the exclusive right of sale for German Standards (DIN-Normen).

English price group 37
www.din.de
www.beuth.de

02.11 1737383

Sofort-Download-Beuth-Book Supply Bureau-KdNr.7066075-ID.SCBLGSA1OBPULJD3QN0TD2AJ.1-2016-08-02 13:22:06

SUPPLIED BY BSB EDGE UNDER LICENCE FROM DIN FOR RAJARAMBAPU INSTITUTE OF TECHNOLOGY - SANGLI DIST. VIDE BSB EDGE ORDER REGISTRATION NO. ORD01-1088 ON 02/08/2016

A comma is used as the decimal marker.

National foreword

This standard has been prepared by Technical Committee CEN/TC 250 “Structural Eurocodes” (Secretariat: BSI, United Kingdom).

The responsible German body involved in its preparation was the *Normenausschuss Bauwesen* (Building and Civil Engineering Standards Committee), Working Committee NA 005-51-06 AA *Erdbeben; Sonderfragen (Sp CEN/TC 250/SC 8).*

This document includes Corrigendum EN 1998-1:2004/AC:2009, approved by CEN on 8 July 2009.

This European Standard is part of a series of standards dealing with structural design (Eurocodes) which are intended to be used as a “package”. In Guidance Paper L on the application and use of Eurocodes, issued by the EU Commission, reference is made to transitional periods for the introduction of the Eurocodes in the Member states. The transitional periods are given in the Foreword of this standard.

In Germany, this standard is to be applied in conjunction with the National Annex.

Attention is drawn to the possibility that some of the elements of this document may be the subject of patent rights. DIN [and/or DKE] shall not be held responsible for identifying any or all such patent rights.

This standard including National Annex NA, together with DIN EN 1998-5:2010-12 and DIN EN 1998-5/NA:2009-09, supersedes DIN 4149:2005-04 relating to buildings in German earthquake zones.

The start and finish of text introduced or altered by amendment is indicated in the text by tags ▌AC〉 〈AC▌.

Amendments

This standard differs from DIN V ENV 1998-1-1:1997-06, DIN V ENV 1998-1-2:1997-06 and DIN V ENV 1998-1-3:1997-06 as follows:

a) the prestandards have been combined in this document and the prestandard status has been changed to that of a full standard;

b) the comments received from the national standards bodies of CEN have been taken into account and the text of the standard has been completely revised.

Compared with DIN EN 1998-1:2006-04 and DIN 4149:2005-04, the following corrections have been made:

a) the standard has been based on European design rules;

b) superseding notes have been corrected;

c) this standard is the consolidated version of the previous 2004 edition with Corrigendum AC:2009;

d) the standard has been editorially revised;

e) foundations, retaining structures and geotechnical aspects are specified in DIN EN 1998-5:2010-12.

Previous editions

DIN 4149: 2005-04

Sofort-Download-Beuth-Book Supply Bureau-KdNr.7066075-ID.SCBLGSA1OBPULJD3QN0TD2AJ.1-2016-08-02 13:22:06

SUPPLIED BY BSB EDGE UNDER LICENCE FROM DIN FOR RAJARAMBAPU INSTITUTE OF TECHNOLOGY - SANGLI DIST. VIDE BSB EDGE ORDER REGISTRATION NO. ORD01-1088 ON 02/08/2016

Previous editions

DIN 4149: 2005-04
DIN 4149-1: 1981-04
DIN 4149/A1: 1992-12
DIN EN 1998-1: 2006-04
DIN V ENV 1998-1-1: 1997-06
DIN V ENV 1998-1-2: 1997-06
DIN V ENV 1998-1-3: 1997-06

SUPPLIED BY BSB EDGE UNDER LICENCE FROM DIN FOR RAJARAMBAPU INSTITUTE OF TECHNOLOGY - SANGLI DIST. VIDE BSB EDGE ORDER REGISTRATION NO. ORD01-1088 ON 02/08/2016

Sofort-Download-Beuth-Book Supply Bureau-KdNr.7066075-ID.SCBLGSA1OBPULJD3QN0TD2AJ.1-2016-08-02 13:22:06

— This page is intentionally blank —

Sofort-Download-Beuth-Book Supply Bureau-KdNr.7066075-ID.SCBLGSA1OBPULJD3QN0TD2AJ.1-2016-08-02 13:22:06

SUPPLIED BY BSB EDGE UNDER LICENCE FROM DIN FOR RAJARAMBAPU INSTITUTE OF TECHNOLOGY - SANGLI DIST. VIDE BSB EDGE ORDER REGISTRATION NO. ORD01-1088 ON 02/08/2016

EUROPEAN STANDARD

NORME EUROPÉENNE

EUROPÄISCHE NORM

EN 1998-1

December 2004

+ AC

July 2009

ICS 91.120.25

English version

Eurocode 8: Design of structures for earthquake resistance — Part 1: General rules, seismic actions and rules for buildings

Eurocode 8: Calcul des structures pour leur résistance aux séismes — Partie 1: Règles générales, actions sismiques et règles pour les bâtiments

Eurocode 8: Auslegung von Bauwerken gegen Erdbeben — Teil 1: Grundlagen, Erdbebeneinwirkungen und Regeln für Hochbauten

EN 1998-1:2004 was approved by CEN on 2004-04-23 and Amendment AC:2009 on 2009-07-08.

CEN members are bound to comply with the CEN/CENELEC Internal Regulations which stipulate the conditions for giving this European Standard the status of a national standard without any alteration. Up-to-date lists and bibliographical references concerning such national standards may be obtained on application to the Management Centre or to any CEN member.

The European Standards exist in three official versions (English, French, German). A version in any other language made by translation under the responsibility of a CEN member into its own language and notified to the Management Centre has the same status as the official versions.

CEN members are the national standards bodies of Austria, Belgium, Bulgaria, Croatia, Cyprus, Czech Republic, Denmark, Estonia, Finland, France, Germany, Greece, Hungary, Iceland, Ireland, Italy, Latvia, Lithuania, Luxembourg, Malta, Netherlands, Norway, Poland, Portugal, Romania, Slovakia, Slovenia, Spain, Sweden, Switzerland and United Kingdom.

EUROPEAN COMMITTEE FOR STANDARDIZATION
COMITÉ EUROPÉEN DE NORMALISATION
EUROPÄISCHES KOMITEE FÜR NORMUNG

Management Centre: Avenue Marnix 17, B-1000 Brussels

© 2009 CEN All rights of exploitation in any form and by any means reserved worldwide for CEN national Members.

Ref. No. EN 1998-1:2004 + AC:2009 E

SUPPLIED BY BSB EDGE UNDER LICENCE FROM DIN FOR RAJARAMBAPU INSTITUTE OF TECHNOLOGY - SANGLI DIST. VIDE BSB EDGE ORDER REGISTRATION NO. ORD01-1088 ON 02/08/2016

Sofort-Download-Beuth-Book Supply Bureau-KdNr.7066075-ID.SCBLGSA1OBPULJD3QN0TD2AJ.1-2016-08-02 13:22:06

Contents

Page

FOREWORD TO EN 1998-1:2004 + AC:2009 ..... **8**

1 GENERAL **15**

1.1 SCOPE 15
1.1.1 Scope of EN 1998 15
1.1.2 Scope of EN 1998-1 15
1.1.3 Further Parts of EN 1998 16
1.2 NORMATIVE REFERENCES 16
1.2.1 General reference standards 16
1.2.2 Reference Codes and Standards 17
1.3 ASSUMPTIONS 17
1.4 DISTINCTION BETWEEN PRINCIPLES AND APPLICATION RULES 17
1.5 TERMS AND DEFINITIONS 17
1.5.1 Terms common to all Eurocodes 17
1.5.2 〈AC〉 Further terms used in EN 1998-1 〈AC〉 18
1.6 SYMBOLS 19
1.6.1 General 19
1.6.2 Further symbols used in Sections 2 and 3 of EN 1998-1 19
1.6.3 Further symbols used in Section 4 of EN 1998-1 20
1.6.4 Further symbols used in Section 5 of EN 1998-1 21
1.6.5 Further symbols used in Section 6 of EN 1998-1 24
1.6.6 Further symbols used in Section 7 of EN 1998-1 25
1.6.7 Further symbols used in Section 8 of EN 1998-1 27
1.6.8 Further symbols used in Section 9 of EN 1998-1 27
1.6.9 Further symbols used in Section 10 of EN 1998-1 28
1.7 S.I. UNITS 28

2 PERFORMANCE REQUIREMENTS AND COMPLIANCE CRITERIA **29**

2.1 FUNDAMENTAL REQUIREMENTS 29
2.2 COMPLIANCE CRITERIA 30
2.2.1 General 30
2.2.2 Ultimate limit state 30
2.2.3 Damage limitation state 31
2.2.4 Specific measures 32
2.2.4.1 Design 32
2.2.4.2 Foundations 32
2.2.4.3 Quality system plan 32

3 GROUND CONDITIONS AND SEISMIC ACTION **33**

3.1 GROUND CONDITIONS 33
3.1.1 General 33
3.1.2 Identification of ground types 33
3.2 SEISMIC ACTION 35
3.2.1 Seismic zones 35
3.2.2 Basic representation of the seismic action 36
3.2.2.1 General 36
3.2.2.2 Horizontal elastic response spectrum 37
3.2.2.3 Vertical elastic response spectrum 40
3.2.2.4 Design ground displacement 41
3.2.2.5 Design spectrum for elastic analysis 41
3.2.3 Alternative representations of the seismic action 42
3.2.3.1 Time - history representation 42
3.2.3.2 Spatial model of the seismic action 43
3.2.4 Combinations of the seismic action with other actions 44

4 DESIGN OF BUILDINGS **45**

4.1 GENERAL 45

Sofort-Download-Beuth-Book Supply Bureau-KdNr.7066075-ID.SCBLGSA1OBPULJD3QN0TD2AJ.1-2016-08-02 13:22:06

SUPPLIED BY BSB EDGE UNDER LICENCE FROM DIN FOR RAJARAMBAPU INSTITUTE OF TECHNOLOGY - SANGLI DIST. VIDE BSB EDGE ORDER REGISTRATION NO. ORD01-1088 ON 02/08/2016

4.1.1 Scope ... 45
4.2 CHARACTERISTICS OF EARTHQUAKE RESISTANT BUILDINGS ... 45
4.2.1 Basic principles of conceptual design ... 45
4.2.1.1 Structural simplicity ... 45
4.2.1.2 Uniformity, symmetry and redundancy ... 45
4.2.1.3 Bi-directional resistance and stiffness ... 46
4.2.1.4 Torsional resistance and stiffness ... 46
4.2.1.5 Diaphragmatic behaviour at storey level ... 46
4.2.1.6 Adequate foundation ... 47
4.2.2 Primary and secondary seismic members ... 47
4.2.3 Criteria for structural regularity ... 48
4.2.3.1 General ... 48
4.2.3.2 Criteria for regularity in plan ... 49
4.2.3.3 Criteria for regularity in elevation ... 50
4.2.4 Combination coefficients for variable actions ... 52
4.2.5 Importance classes and importance factors ... 52
4.3 STRUCTURAL ANALYSIS ... 53
4.3.1 Modelling ... 53
4.3.2 Accidental torsional effects ... 54
4.3.3 Methods of analysis ... 54
4.3.3.1 General ... 54
4.3.3.2 Lateral force method of analysis ... 56
4.3.3.3 Modal response spectrum analysis ... 59
4.3.3.4 Non-linear methods ... 61
4.3.3.5 Combination of the effects of the components of the seismic action ... 64
4.3.4 Displacement calculation ... 66
4.3.5 Non-structural elements ... 66
4.3.5.1 General ... 66
4.3.5.2 Verification ... 67
4.3.5.3 Importance factors ... 68
4.3.5.4 Behaviour factors ... 68
4.3.6 Additional measures for masonry infilled frames ... 68
4.3.6.1 General ... 68
4.3.6.2 Requirements and criteria ... 69
4.3.6.3 Irregularities due to masonry infills ... 69
4.3.6.4 Damage limitation of infills ... 70
4.4 SAFETY VERIFICATIONS ... 71
4.4.1 General ... 71
4.4.2 Ultimate limit state ... 71
4.4.2.1 General ... 71
4.4.2.2 Resistance condition ... 71
4.4.2.3 Global and local ductility condition ... 72
4.4.2.4 Equilibrium condition ... 74
4.4.2.5 Resistance of horizontal diaphragms ... 74
4.4.2.6 Resistance of foundations ... 74
4.4.2.7 Seismic joint condition ... 75
4.4.3 Damage limitation ... 76
4.4.3.1 General ... 76
4.4.3.2 Limitation of interstorey drift ... 76

5 SPECIFIC RULES FOR CONCRETE BUILDINGS ... 78

5.1 GENERAL ... 78
5.1.1 Scope ... 78
5.1.2 Terms and definitions ... 78
5.2 DESIGN CONCEPTS ... 80
5.2.1 Energy dissipation capacity and ductility classes ... 80
5.2.2 Structural types and behaviour factors ... 81
5.2.2.1 Structural types ... 81
5.2.2.2 Behaviour factors for horizontal seismic actions ... 82
5.2.3 Design criteria ... 84
5.2.3.1 General ... 84
5.2.3.2 Local resistance condition ... 84
5.2.3.3 Capacity design rule ... 84
5.2.3.4 Local ductility condition ... 84

Sofort-Download-Beuth-Book Supply Bureau-KdNr.7066075-ID.SCBLGSA1OBPULJD3QN0TD2AJ.1-2016-08-02 13:22:06

SUPPLIED BY BSB EDGE UNDER LICENCE FROM DIN FOR RAJARAMBAPU INSTITUTE OF TECHNOLOGY - SANGLI DIST. VIDE BSB EDGE ORDER REGISTRATION NO. ORD01-1088 ON 02/08/2016

5.2.3.5 Structural redundancy ... 86
5.2.3.6 Secondary seismic members and resistances ... 86
5.2.3.7 Specific additional measures ... 86
5.2.4 Safety verifications ... 87
5.3 DESIGN TO EN 1992-1-1 ... 87
5.3.1 General ... 87
5.3.2 Materials ... 88
5.3.3 Behaviour factor ... 88
5.4 DESIGN FOR DCM ... 88
5.4.1 Geometrical constraints and materials ... 88
5.4.1.1 Material requirements ... 88
5.4.1.2 Geometrical constraints ... 88
5.4.2 Design action effects ... 89
5.4.2.1 General ... 89
5.4.2.2 Beams ... 89
5.4.2.3 Columns ... 91
5.4.2.4 Special provisions for ductile walls ... 92
5.4.2.5 Special provisions for large lightly reinforced walls ... 94
5.4.3 ULS verifications and detailing ... 95
5.4.3.1 Beams ... 95
5.4.3.2 Columns ... 97
5.4.3.3 Beam-column joints ... 100
5.4.3.4 Ductile Walls ... 100
5.4.3.5 Large lightly reinforced walls ... 104
5.5 DESIGN FOR DCH ... 106
5.5.1 Geometrical constraints and materials ... 106
5.5.1.1 Material requirements ... 106
5.5.1.2 Geometrical constraints ... 106
5.5.2 Design action effects ... 107
5.5.2.1 Beams ... 107
5.5.2.2 Columns ... 107
5.5.2.3 Beam-column joints ... 107
5.5.2.4 Ductile Walls ... 108
5.5.3 ULS verifications and detailing ... 109
5.5.3.1 Beams ... 109
5.5.3.2 Columns ... 111
5.5.3.3 Beam-column joints ... 112
5.5.3.4 Ductile Walls ... 114
5.5.3.5 Coupling elements of coupled walls ... 119
5.6 PROVISIONS FOR ANCHORAGES AND SPLICES ... 120
5.6.1 General ... 120
5.6.2 Anchorage of reinforcement ... 120
5.6.2.1 Columns ... 120
5.6.2.2 Beams ... 120
5.6.3 Splicing of bars ... 122
5.7 DESIGN AND DETAILING OF SECONDARY SEISMIC ELEMENTS ... 123
5.8 CONCRETE FOUNDATION ELEMENTS ... 123
5.8.1 Scope ... 123
5.8.2 Tie-beams and foundation beams ... 124
5.8.3 Connections of vertical elements with foundation beams or walls ... 125
5.8.4 Cast-in-place concrete piles and pile caps ... 125
5.9 LOCAL EFFECTS DUE TO MASONRY OR CONCRETE INFILLS ... 126
5.10 PROVISIONS FOR CONCRETE DIAPHRAGMS ... 127
5.11 PRECAST CONCRETE STRUCTURES ... 127
5.11.1 General ... 127
5.11.1.1 Scope and structural types ... 127
5.11.1.2 Evaluation of precast structures ... 128
5.11.1.3 Design criteria ... 129
5.11.1.4 Behaviour factors ... 130
5.11.1.5 Analysis of transient situation ... 130
5.11.2 Connections of precast elements ... 131
5.11.2.1 General provisions ... 131
5.11.2.2 Evaluation of the resistance of connections ... 132
5.11.3 Elements ... 132

Sofort-Download-Beuth-Book Supply Bureau-KdNr.7066075-ID.SCBLGSA1OBPULJD3QN0TD2AJ.1-2016-08-02 13:22:06

SUPPLIED BY BSB EDGE UNDER LICENCE FROM DIN FOR RAJARAMBAPU INSTITUTE OF TECHNOLOGY - SANGLI DIST. VIDE BSB EDGE ORDER REGISTRATION NO. ORD01-1088 ON 02/08/2016

5.11.3.1 Beams ... 132
5.11.3.2 Columns ... 132
5.11.3.3 Beam-column joints ... 133
5.11.3.4 Precast large-panel walls ... 133
5.11.3.5 Diaphragms ... 135

6 SPECIFIC RULES FOR STEEL BUILDINGS ... 137

6.1 GENERAL ... 137
6.1.1 Scope ... 137
6.1.2 Design concepts ... 137
6.1.3 Safety verifications ... 138
6.2 MATERIALS ... 138
6.3 STRUCTURAL TYPES AND BEHAVIOUR FACTORS ... 140
6.3.1 Structural types ... 140
6.3.2 Behaviour factors ... 143
6.4 STRUCTURAL ANALYSIS ... 144
6.5 DESIGN CRITERIA AND DETAILING RULES FOR DISSIPATIVE STRUCTURAL BEHAVIOUR COMMON TO ALL STRUCTURAL TYPES ... 144
6.5.1 General ... 144
6.5.2 Design criteria for dissipative structures ... 144
6.5.3 Design rules for dissipative elements in compression or bending ... 145
6.5.4 Design rules for parts or elements in tension ... 145
6.5.5 Design rules for connections in dissipative zones ... 145
6.6 DESIGN AND DETAILING RULES FOR MOMENT RESISTING FRAMES ... 146
6.6.1 Design criteria ... 146
6.6.2 Beams ... 146
6.6.3 Columns ... 147
6.6.4 Beam to column connections ... 149
6.7 DESIGN AND DETAILING RULES FOR FRAMES WITH CONCENTRIC BRACINGS ... 150
6.7.1 Design criteria ... 150
6.7.2 Analysis ... 151
6.7.3 Diagonal members ... 152
6.7.4 Beams and columns ... 152
6.8 DESIGN AND DETAILING RULES FOR FRAMES WITH ECCENTRIC BRACINGS ... 153
6.8.1 Design criteria ... 153
6.8.2 Seismic links ... 154
6.8.3 Members not containing seismic links ... 157
6.8.4 Connections of the seismic links ... 158
6.9 DESIGN RULES FOR INVERTED PENDULUM STRUCTURES ... 158
6.10 DESIGN RULES FOR STEEL STRUCTURES WITH CONCRETE CORES OR CONCRETE WALLS AND FOR MOMENT RESISTING FRAMES COMBINED WITH CONCENTRIC BRACINGS OR INFILLS ... 159
6.10.1 Structures with concrete cores or concrete walls ... 159
6.10.2 Moment resisting frames combined with concentric bracings ... 159
6.10.3 Moment resisting frames combined with infills ... 159
6.11 CONTROL OF DESIGN AND CONSTRUCTION ... 159

7 SPECIFIC RULES FOR COMPOSITE STEEL – CONCRETE BUILDINGS ... 161

7.1 GENERAL ... 161
7.1.1 Scope ... 161
7.1.2 Design concepts ... 161
7.1.3 Safety verifications ... 162
7.2 MATERIALS ... 163
7.2.1 Concrete ... 163
7.2.2 Reinforcing steel ... 163
7.2.3 Structural steel ... 163
7.3 STRUCTURAL TYPES AND BEHAVIOUR FACTORS ... 163
7.3.1 Structural types ... 163
7.3.2 Behaviour factors ... 165
7.4 STRUCTURAL ANALYSIS ... 165
7.4.1 Scope ... 165
7.4.2 Stiffness of sections ... 166

Sofort-Download-Beuth-Book Supply Bureau-KdNr.7066075-ID.SCBLGSA1OBPULJD3QN0TD2AJ.1-2016-08-02 13:22:06

SUPPLIED BY BSB EDGE UNDER LICENCE FROM DIN FOR RAJARAMBAPU INSTITUTE OF TECHNOLOGY - SANGLI DIST. VIDE BSB EDGE ORDER REGISTRATION NO. ORD01-1088 ON 02/08/2016

7.5 DESIGN CRITERIA AND DETAILING RULES FOR DISSIPATIVE STRUCTURAL BEHAVIOUR COMMON TO ALL STRUCTURAL TYPES 166
7.5.1 General 166
7.5.2 Design criteria for dissipative structures 166
7.5.3 Plastic resistance of dissipative zones 167
7.5.4 Detailing rules for composite connections in dissipative zones 167
7.6 RULES FOR MEMBERS 170
7.6.1 General 170
7.6.2 Steel beams composite with slab 172
7.6.3 Effective width of slab 174
7.6.4 Fully encased composite columns 176
7.6.5 Partially-encased members 178
7.6.6 Filled Composite Columns 179
7.7 DESIGN AND DETAILING RULES FOR MOMENT FRAMES 179
7.7.1 Specific criteria 179
7.7.2 Analysis 180
7.7.3 Rules for beams and columns 180
7.7.4 Beam to column connections 181
7.7.5 Condition for disregarding the composite character of beams with slab. 181
7.8 DESIGN AND DETAILING RULES FOR COMPOSITE CONCENTRICALLY BRACED FRAMES 181
7.8.1 Specific criteria 181
7.8.2 Analysis 181
7.8.3 Diagonal members 181
7.8.4 Beams and columns 181
7.9 DESIGN AND DETAILING RULES FOR COMPOSITE ECCENTRICALLY BRACED FRAMES 181
7.9.1 Specific criteria 181
7.9.2 Analysis 182
7.9.3 Links 182
7.9.4 Members not containing seismic links 183
7.10 DESIGN AND DETAILING RULES FOR STRUCTURAL SYSTEMS MADE OF REINFORCED CONCRETE SHEAR WALLS COMPOSITE WITH STRUCTURAL STEEL ELEMENTS 183
7.10.1 Specific criteria 183
7.10.2 Analysis 185
7.10.3 Detailing rules for composite walls of ductility class DCM 185
7.10.4 Detailing rules for coupling beams of ductility class DCM 186
7.10.5 Additional detailing rules for ductility class DCH. 186
7.11 DESIGN AND DETAILING RULES FOR COMPOSITE STEEL PLATE SHEAR WALLS 186
7.11.1 Specific criteria 186
7.11.2 Analysis 187
7.11.3 Detailing rules 187
7.12 CONTROL OF DESIGN AND CONSTRUCTION 187

8 SPECIFIC RULES FOR TIMBER BUILDINGS 188

8.1 GENERAL 188
8.1.1 Scope 188
8.1.2 Definitions 188
8.1.3 Design concepts 188
8.2 MATERIALS AND PROPERTIES OF DISSIPATIVE ZONES 189
8.3 DUCTILITY CLASSES AND BEHAVIOUR FACTORS 190
8.4 STRUCTURAL ANALYSIS 191
8.5 DETAILING RULES 191
8.5.1 General 191
8.5.2 Detailing rules for connections 192
8.5.3 Detailing rules for horizontal diaphragms 192
8.6 SAFETY VERIFICATIONS 192
8.7 CONTROL OF DESIGN AND CONSTRUCTION 193

9 SPECIFIC RULES FOR MASONRY BUILDINGS 194

9.1 SCOPE 194
9.2 MATERIALS AND BONDING PATTERNS 194

Sofort-Download-Beuth-Book Supply Bureau-KdNr.7066075-ID.SCBLGSA1OBPULJD3QN0TD2AJ.1-2016-08-02 13:22:06

SUPPLIED BY BSB EDGE UNDER LICENCE FROM DIN FOR RAJARAMBAPU INSTITUTE OF TECHNOLOGY - SANGLI DIST. VIDE BSB EDGE ORDER REGISTRATION NO. ORD01-1088 ON 02/08/2016

9.2.1 Types of masonry units ... 194
9.2.2 Minimum strength of masonry units ... 194
9.2.3 Mortar ... 194
9.2.4 Masonry bond ... 194
9.3 TYPES OF CONSTRUCTION AND BEHAVIOUR FACTORS ... 195
9.4 STRUCTURAL ANALYSIS ... 196
9.5 DESIGN CRITERIA AND CONSTRUCTION RULES ... 197
9.5.1 General ... 197
9.5.2 Additional requirements for unreinforced masonry satisfying EN 1998-1 ... 198
9.5.3 Additional requirements for confined masonry ... 198
9.5.4 Additional requirements for reinforced masonry ... 199
9.6 SAFETY VERIFICATION ... 200
9.7 RULES FOR "SIMPLE MASONRY BUILDINGS" ... 200
9.7.1 General ... 200
9.7.2 Rules ... 200

10 BASE ISOLATION ... 203

10.1 SCOPE ... 203
10.2 DEFINITIONS ... 203
10.3 FUNDAMENTAL REQUIREMENTS ... 204
10.4 COMPLIANCE CRITERIA ... 205
10.5 GENERAL DESIGN PROVISIONS ... 205
10.5.1 General provisions concerning the devices ... 205
10.5.2 Control of undesirable movements ... 206
10.5.3 Control of differential seismic ground motions ... 206
10.5.4 Control of displacements relative to surrounding ground and constructions ... 206
10.5.5 Conceptual design of base isolated buildings ... 206
10.6 SEISMIC ACTION ... 207
10.7 BEHAVIOUR FACTOR ... 207
10.8 PROPERTIES OF THE ISOLATION SYSTEM ... 207
10.9 STRUCTURAL ANALYSIS ... 208
10.9.1 General ... 208
10.9.2 Equivalent linear analysis ... 208
10.9.3 Simplified linear analysis ... 209
10.9.4 Modal simplified linear analysis ... 211
10.9.5 Time-history analysis ... 211
10.9.6 Non structural elements ... 211
10.10 SAFETY VERIFICATIONS AT ULTIMATE LIMIT STATE ... 211

ANNEX A (informative) **ELASTIC DISPLACEMENT RESPONSE SPECTRUM ... 213**

ANNEX B (informative) **DETERMINATION OF THE TARGET DISPLACEMENT FOR NONLINEAR STATIC (PUSHOVER) ANALYSIS ... 215**

ANNEX C (normative) **DESIGN OF THE SLAB OF STEEL-CONCRETE COMPOSITE BEAMS AT BEAM-COLUMN JOINTS IN MOMENT RESISTING FRAMES ... 219**

Sofort-Download-Beuth-Book Supply Bureau-KdNr.7066075-ID.SCBLGSA1OBPULJD3QN0TD2AJ.1-2016-08-02 13:22:06

SUPPLIED BY BSB EDGE UNDER LICENCE FROM DIN FOR RAJARAMBAPU INSTITUTE OF TECHNOLOGY - SANGLI DIST. VIDE BSB EDGE ORDER REGISTRATION NO. ORD01-1088 ON 02/08/2016

SUPPLIED BY BSB EDGE UNDER LICENCE FROM DIN FOR RAJARAMBAPU INSTITUTE OF TECHNOLOGY - SANGLI DIST. VIDE BSB EDGE ORDER REGISTRATION NO. ORD01-1088 ON 02/08/2016

Sofort-Download-Beuth-Book Supply Bureau-KdNr.7066075-ID.SCBLGSA1OBPULJD3QN0TD2AJ.1-2016-08-02 13:22:06

Foreword to EN 1998-1:2004 + AC:2009

This document (EN 1998-1:2004 + AC:2009) has been prepared by Technical Committee CEN/TC 250 "Structural Eurocodes", the secretariat of which is held by BSI. CEN/TC 250 is responsible for all Structural Eurocodes.

This European Standard shall be given the status of a national standard, either by publication of an identical text or by endorsement, at the latest by June 2005, and conflicting national standards shall be withdrawn at the latest by March 2010.

This document supersedes ENV 1998-1-1:1994, ENV 1998-1-2:1994 and ENV 1998-1-3:1995.

According to the CEN-CENELEC Internal Regulations, the National Standard Organisations of the following countries are bound to implement this European Standard: Austria, Belgium, Bulgaria, Croatia, Cyprus, Czech Republic, Denmark, Estonia, Finland, France, Germany, Greece, Hungary, Iceland, Ireland, Italy, Latvia, Lithuania, Luxembourg, Malta, Netherlands, Norway, Poland, Portugal, Romania, Slovakia, Slovenia, Spain, Sweden, Switzerland and United Kingdom.

Background of the Eurocode programme

In 1975, the Commission of the European Community decided on an action programme in the field of construction, based on article 95 of the Treaty. The objective of the programme was the elimination of technical obstacles to trade and the harmonisation of technical specifications.

Within this action programme, the Commission took the initiative to establish a set of harmonised technical rules for the design of construction works which, in a first stage, would serve as an alternative to the national rules in force in the Member States and, ultimately, would replace them.

For fifteen years, the Commission, with the help of a Steering Committee with Representatives of Member States, conducted the development of the Eurocodes programme, which led to the first generation of European codes in the 1980's.

In 1989, the Commission and the Member States of the EU and EFTA decided, on the basis of an agreement[1] between the Commission and CEN, to transfer the preparation and the publication of the Eurocodes to CEN through a series of Mandates, in order to provide them with a future status of European Standard (EN). This links *de facto* the Eurocodes with the provisions of all the Council's Directives and/or Commission's Decisions dealing with European standards (*e.g.* the Council Directive 89/106/EEC on construction products - CPD - and Council Directives 93/37/EEC, 92/50/EEC and 89/440/EEC on public works and services and equivalent EFTA Directives initiated in pursuit of setting up the internal market).

[1] Agreement between the Commission of the European Communities and the European Committee for Standardisation (CEN) concerning the work on EUROCODES for the design of building and civil engineering works (BC/CEN/03/89).

The Structural Eurocode programme comprises the following standards generally consisting of a number of Parts:

EN 1990 Eurocode: Basis of structural design

EN 1991 Eurocode 1: Actions on structures

EN 1992 Eurocode 2: Design of concrete structures

EN 1993 Eurocode 3: Design of steel structures

EN 1994 Eurocode 4: Design of composite steel and concrete structures

EN 1995 Eurocode 5: Design of timber structures

EN 1996 Eurocode 6: Design of masonry structures

EN 1997 Eurocode 7: Geotechnical design

EN 1998 Eurocode 8: Design of structures for earthquake resistance

EN 1999 Eurocode 9: Design of aluminium structures

Eurocode standards recognise the responsibility of regulatory authorities in each Member State and have safeguarded their right to determine values related to regulatory safety matters at national level where these continue to vary from State to State.

Status and field of application of Eurocodes

The Member States of the EU and EFTA recognise that Eurocodes serve as reference documents for the following purposes:

- as a means to prove compliance of building and civil engineering works with the essential requirements of Council Directive 89/106/EEC, particularly Essential Requirement N°1 - Mechanical resistance and stability - and Essential Requirement N°2 - Safety in case of fire;
- as a basis for specifying contracts for construction works and related engineering services;
- as a framework for drawing up harmonised technical specifications for construction products (ENs and ETAs)

The Eurocodes, as far as they concern the construction works themselves, have a direct relationship with the Interpretative Documents[2] referred to in Article 12 of the CPD, although they are of a different nature from harmonised product standards[3]. Therefore, technical aspects arising from the Eurocodes work need to be adequately considered by

[2] According to Art. 3.3 of the CPD, the essential requirements (ERs) shall be given concrete form in interpretative documents for the creation of the necessary links between the essential requirements and the mandates for hENs and ETAGs/ETAs.

[3] According to Art. 12 of the CPD the interpretative documents shall :

a) give concrete form to the essential requirements by harmonising the terminology and the technical bases and indicating classes or levels for each requirement where necessary ;

b) indicate methods of correlating these classes or levels of requirement with the technical specifications, e.g. methods of calculation and of proof, technical rules for project design, etc. ;

c) serve as a reference for the establishment of harmonised standards and guidelines for European technical approvals.

The Eurocodes, *de facto*, play a similar role in the field of the ER 1 and a part of ER 2.

Sofort-Download-Beuth-Book Supply Bureau-KdNr.7066075-ID.SCBLGSA1OBPULJD3QN0TD2AJ.1-2016-08-02 13:22:06

SUPPLIED BY BSB EDGE UNDER LICENCE FROM DIN FOR RAJARAMBAPU INSTITUTE OF TECHNOLOGY - SANGLI DIST. VIDE BSB EDGE ORDER REGISTRATION NO. ORD01-1088 ON 02/08/2016

CEN Technical Committees and/or EOTA Working Groups working on product standards with a view to achieving a full compatibility of these technical specifications with the Eurocodes.

The Eurocode standards provide common structural design rules for everyday use for the design of whole structures and component products of both a traditional and an innovative nature. Unusual forms of construction or design conditions are not specifically covered and additional expert consideration will be required by the designer in such cases.

National Standards implementing Eurocodes

The National Standards implementing Eurocodes will comprise the full text of the Eurocode (including any annexes), as published by CEN, which may be preceded by a National title page and National foreword, ▌AC⟩ and may be followed by a National annex ⟨AC▌.

The National annex may only contain information on those parameters which are left open in the Eurocode for national choice, known as Nationally Determined Parameters, to be used for the design of buildings and civil engineering works to be constructed in the country concerned, i.e. :

- values and/or classes where alternatives are given in the Eurocode,
- values to be used where a symbol only is given in the Eurocode,
- country specific data (geographical, climatic, etc.), *e.g.* snow map,
- the procedure to be used where alternative procedures are given in the Eurocode.

It may also contain

- decisions on the application of informative annexes,
- references to non-contradictory complementary information to assist the user to apply the Eurocode.

Links between Eurocodes and harmonised technical specifications (ENs and ETAs) for products

There is a need for consistency between the harmonised technical specifications for construction products and the technical rules for works[4]. Furthermore, all the information accompanying the CE Marking of the construction products which refer to Eurocodes shall clearly mention which Nationally Determined Parameters have been taken into account.

Additional information specific to EN 1998-1

The scope of EN 1998 is defined in **1.1.1** and the scope of this Part of EN 1998 is defined in **1.1.2**. Additional Parts of EN 1998 are listed in **1.1.3**.

[4] See Art.3.3 and Art.12 of the CPD, as well as clauses 4.2, 4.3.1, 4.3.2 and 5.2 of ID 1.

Sofort-Download-Beuth-Book Supply Bureau-KdNr.7066075-ID.SCBLGSA1OBPULJD3QN0TD2AJ.1-2016-08-02 13:22:06

SUPPLIED BY BSB EDGE UNDER LICENCE FROM DIN FOR RAJARAMBAPU INSTITUTE OF TECHNOLOGY - SANGLI DIST. VIDE BSB EDGE ORDER REGISTRATION NO. ORD01-1088 ON 02/08/2016

EN 1998-1 was developed from the merger of ENV 1998-1-1:1994, ENV 1998-1-2:1994 and ENV 1998-1-3:1995. As mentioned in **1.1.1**, attention must be paid to the fact that for the design of structures in seismic regions the provisions of EN 1998 are to be applied in addition to the provisions of the other relevant EN 1990 to EN 1997 and EN 1999.

One fundamental issue in EN 1998-1 is the definition of the seismic action. Given the wide difference of seismic hazard and seismo-genetic characteristics in the various member countries, the seismic action is herein defined in general terms. The definition allows various Nationally Determined Parameters (NDP) which should be confirmed or modified in the National Annexes.

It is however considered that, by the use of a common basic model for the representation of the seismic action, an important step is taken in EN 1998-1 in terms of Code harmonisation.

EN 1998-1 contains in its section related to masonry buildings specific provisions which simplify the design of "simple masonry buildings".

National annex for EN 1998-1

This standard gives alternative procedures, values and recommendations for classes with notes indicating where national choices may be made. Therefore the National Standard implementing EN 1998-1 should have a National Annex containing all Nationally Determined Parameters to be used for the design of buildings and civil engineering works to be constructed in the relevant country.

National choice is allowed in EN 1998-1:2004 through clauses:

Reference	Item
1.1.2(7)	Informative Annexes A and B.
2.1(1)P	Reference return period T_{NCR} of seismic action for the no-collapse requirement (or, equivalently, reference probability of exceedance in 50 years, P_{NCR}).
2.1(1)P	Reference return period T_{DLR} of seismic action for the damage limitation requirement. (or, equivalently, reference probability of exceedance in 10 years, P_{DLR}).
3.1.1(4)	Conditions under which ground investigations additional to those necessary for design for non-seismic actions may be omitted and default ground classification may be used.
3.1.2(1)	Ground classification scheme accounting for deep geology, including values of parameters S, T_B, T_C and T_D defining horizontal and vertical elastic response spectra in accordance with **3.2.2.2** and **3.2.2.3**.
3.2.1(1), (2),(3)	Seismic zone maps and reference ground accelerations therein.
3.2.1(4)	Governing parameter (identification and value) for threshold of low seismicity .

Sofort-Download-Beuth-Book Supply Bureau-KdNr.7066075-ID.SCBLGSA1OBPULJD3QN0TD2AJ.1-2016-08-02 13:22:06

SUPPLIED BY BSB EDGE UNDER LICENCE FROM DIN FOR RAJARAMBAPU INSTITUTE OF TECHNOLOGY - SANGLI DIST. VIDE BSB EDGE ORDER REGISTRATION NO. ORD01-1088 ON 02/08/2016

[AC⟩ 3.2.1(5)P ⟨AC]	Governing parameter (identification and value) for threshold of very low seismicity .
3.2.2.1(4), [AC⟩ 3.2.2.2(2)P ⟨AC]	Parameters S, T_B, T_C, T_D defining shape of horizontal elastic response spectra.
3.2.2.3(1)P	Parameters a_{vg} T_B, T_C, T_D defining shape of vertical elastic response spectra.
3.2.2.5(4)P	Lower bound factor β on design spectral values.
4.2.3.2(8)	Reference to definitions of centre of stiffness and of torsional radius in multi-storey buildings meeting or not conditions (a) and (b) of **4.2.3.2(8)**
4.2.4(2)P	Values of φ for buildings.
4.2.5(5)P	Importance factor γ_I for buildings.
4.3.3.1 (4)	Decision on whether nonlinear methods of analysis may be applied for the design of non-base-isolated buildings. Reference to information on member deformation capacities and the associated partial factors for the Ultimate Limit State for design or evaluation on the basis of nonlinear analysis methods.
4.3.3.1 (8)	Threshold value of importance factor, γ_I, relating to the permitted use of analysis with two planar models.
4.4.2.5 (2).	[AC⟩ Overstrength factor γ_d for diaphragms. ⟨AC]
4.4.3.2 (2)	Reduction factor ν for displacements at damage limitation limit state
[AC⟩ 5.2.1(5)P ⟨AC]	Geographical limitations on use of ductility classes for concrete buildings.
5.2.2.2(10)	q_o-value for concrete buildings subjected to special Quality System Plan.
[AC⟩ 5.2.4(3) ⟨AC]	Material partial factors for concrete buildings in the seismic design situation.
5.4.3.5.2(1)	Minimum web reinforcement of large lightly reinforced concrete walls
5.8.2(3)	Minimum cross-sectional dimensions of concrete foundation beams.
5.8.2(4)	Minimum thickness and reinforcement ratio of concrete foundation slabs.
5.8.2(5)	Minimum reinforcement ratio of concrete foundation beams.
5.11.1.3.2(3)	Ductility class of precast wall panel systems.
5.11.1.4	[AC⟩ Reduction factors k_p of behavior factors of precast systems. ⟨AC]
5.11.1.5(2)	Seismic action during erection of precast structures.
5.11.3.4(7)e	Minimum longitudinal steel in grouted connections of large panel walls.

Sofort-Download-Beuth-Book Supply Bureau-KdNr.7066075-ID.SCBLGSA1OBPULJD3QN0TD2AJ.1-2016-08-02 13:22:06

SUPPLIED BY BSB EDGE UNDER LICENCE FROM DIN FOR RAJARAMBAPU INSTITUTE OF TECHNOLOGY - SANGLI DIST. VIDE BSB EDGE ORDER REGISTRATION NO. ORD01-1088 ON 02/08/2016

▌AC⟩ 6.1.2(1)P ⟨AC▐	Upper limit of q for low-dissipative structural behaviour concept; limitations on structural behaviour concept; geographical limitations on use of ductility classes for steel buildings.
6.1.3(1)	Material partial factors for steel buildings in the seismic design situation.
6.2(3)	Overstrength factor for capacity design of steel buildings.
6.2 (7)	Information as to how ▌AC⟩ EN 1993-1-10:2005 ⟨AC▐ may be used in the seismic design situation
6.5.5(7)	Reference to complementary rules on acceptable connection design
6.7.4(2)	Residual post-buckling resistance of compression diagonals in steel frames with *V*-bracings.
▌AC⟩ 7.1.2(1)P ⟨AC▐	Upper limit of q for low-dissipative structural behaviour concept; limitations on structural behaviour concept; geographical limitations on use of ductility classes for composite steel-concrete buildings.
7.1.3(1), (3)	Material partial factors for composite steel-concrete buildings in the seismic design situation.
7.1.3(4)	Overstrength factor for capacity design of composite steel-concrete buildings
7.7.2(4)	Stiffness reduction factor for concrete part of a composite steel-concrete column section
▌AC⟩ 8.3(1)P ⟨AC▐	Ductility class for timber buildings.
9.2.1(1)	Type of masonry units with sufficient robustness.
9.2.2(1)	Minimum strength of masonry units.
9.2.3(1)	Minimum strength of mortar in masonry buildings.
9.2.4(1)	Alternative classes for perpend joints in masonry
9.3(2)	Conditions for use of unreinforced masonry satisfying provisions of EN 1996 alone.
9.3(2)	Minimum effective thickness of unreinforced masonry walls satisfying provisions of EN 1996 alone.
9.3(3)	Maximum value of ground acceleration for the use of unreinforced masonry satisfying provisions of EN. 1998-1
9.3(4), Table 9.1	q-factor values in masonry buildings.
9.3(4), Table 9.1	q-factors for buildings with masonry systems which provide enhanced ductility.
9.5.1(5)	Geometric requirements for masonry shear walls.
9.6(3)	Material partial factors in masonry buildings in the seismic design situation.
9.7.2(1)	Maximum number of storeys and minimum area of shear walls of “simple masonry building”.

Sofort-Download-Beuth-Book Supply Bureau-KdNr.7066075-ID.SCBLGSA1OBPULJD3QN0TD2AJ.1-2016-08-02 13:22:06

SUPPLIED BY BSB EDGE UNDER LICENCE FROM DIN FOR RAJARAMBAPU INSTITUTE OF TECHNOLOGY - SANGLI DIST. VIDE BSB EDGE ORDER REGISTRATION NO. ORD01-1088 ON 02/08/2016

9.7.2(2)b	Minimum aspect ratio in plan of “simple masonry buildings”.
9.7.2(2)c	Maximum floor area of recesses in plan for “simple masonry buildings”.
9.7.2(5)	Maximum difference in mass and wall area between adjacent storeys of “simple masonry buildings”.
10.3(2)P	Magnification factor on seismic displacements for isolation devices.

Sofort-Download-Beuth-Book Supply Bureau-KdNr.7066075-ID.SCBLGSA1OBPULJD3QN0TD2AJ.1-2016-08-02 13:22:06

SUPPLIED BY BSB EDGE UNDER LICENCE FROM DIN FOR RAJARAMBAPU INSTITUTE OF TECHNOLOGY - SANGLI DIST. VIDE BSB EDGE ORDER REGISTRATION NO. ORD01-1088 ON 02/08/2016

SUPPLIED BY BSB EDGE UNDER LICENCE FROM DIN FOR RAJARAMBAPU INSTITUTE OF TECHNOLOGY - SANGLI DIST. VIDE BSB EDGE ORDER REGISTRATION NO. ORD01-1088 ON 02/08/2016

Sofort-Download-Beuth-Book Supply Bureau-KdNr.7066075-ID.SCBLGSA1OBPULJD3QN0TD2AJ.1-2016-08-02 13:22:06

1 GENERAL

1.1 Scope

1.1.1 Scope of EN 1998

(1)P EN 1998 applies to the design and construction of buildings and civil engineering works in seismic regions. Its purpose is to ensure that in the event of earthquakes:

– human lives are protected;

– damage is limited; and

– structures important for civil protection remain operational.

NOTE The random nature of the seismic events and the limited resources available to counter their effects are such as to make the attainment of these goals only partially possible and only measurable in probabilistic terms. The extent of the protection that can be provided to different categories of buildings, which is only measurable in probabilistic terms, is a matter of optimal allocation of resources and is therefore expected to vary from country to country, depending on the relative importance of the seismic risk with respect to risks of other origin and on the global economic resources.

(2)P Special structures, such as nuclear power plants, offshore structures and large dams, are beyond the scope of EN 1998.

(3)P EN 1998 contains only those provisions that, in addition to the provisions of the other relevant Eurocodes, must be observed for the design of structures in seismic regions. It complements in this respect the other Eurocodes.

(4) EN 1998 is subdivided into various separate Parts (see **1.1.2** and **1.1.3**).

1.1.2 Scope of EN 1998-1

(1) EN 1998-1 applies to the design of buildings and civil engineering works in seismic regions. It is subdivided in 10 Sections, some of which are specifically devoted to the design of buildings.

(2) Section **2** of EN 1998-1 contains the basic performance requirements and compliance criteria applicable to buildings and civil engineering works in seismic regions.

(3) Section **3** of EN 1998-1 gives the rules for the representation of seismic actions and for their combination with other actions. Certain types of structures, dealt with in EN 1998-2 to EN 1998-6, need complementing rules which are given in those Parts.

(4) Section **4** of EN 1998-1 contains general design rules relevant specifically to buildings.

(5) Sections **5** to **9** of EN 1998-1 contain specific rules for various structural materials and elements, relevant specifically to buildings as follows:

– Section **5**: Specific rules for concrete buildings;

– Section **6**: Specific rules for steel buildings;

– Section **7**: Specific rules for composite steel-concrete buildings;

– Section **8**: Specific rules for timber buildings;

– Section **9**: Specific rules for masonry buildings.

(6) Section **10** contains the fundamental requirements and other relevant aspects of design and safety related to base isolation of structures and specifically to base isolation of buildings.

NOTE Specific rules for isolation of bridges are developed in EN 1998-2.

(7) Annex C contains additional elements related to the design of slab reinforcement in steel-concrete composite beams at beam-column joints of moment frames.

NOTE Informative Annex A and informative Annex B contain additional elements related to the elastic displacement response spectrum and to target displacement for pushover analysis.

1.1.3 Further Parts of EN 1998

(1)P Further Parts of EN 1998 include, in addition to EN 1998-1, the following:

– EN 1998-2 contains specific provisions relevant to bridges;

– EN 1998-3 contains provisions for the seismic assessment and retrofitting of existing buildings;

– EN 1998-4 contains specific provisions relevant to silos, tanks and pipelines;

– EN 1998-5 contains specific provisions relevant to foundations, retaining structures and geotechnical aspects;

– EN 1998-6 contains specific provisions relevant to towers, masts and chimneys.

1.2 Normative References

(1)P This European Standard incorporates by dated or undated reference, provisions from other publications. These normative references are cited at the appropriate places in the text and the publications are listed hereafter. For dated references, subsequent amendments to or revisions of any of these publications apply to this European Standard only when incorporated in it by amendment or revision. For undated references the latest edition of the publication referred to applies (including amendments).

1.2.1 General reference standards

EN 1990 Eurocode - Basis of structural design

EN 1992-1-1 Eurocode 2 – Design of concrete structures – Part 1-1: General – Common rules for building and civil engineering structures

EN 1993-1-1 Eurocode 3 – Design of steel structures – Part 1-1: General – General rules

Sofort-Download-Beuth-Book Supply Bureau-KdNr.7066075-ID.SCBLGSA1OBPULJD3QN0TD2AJ.1-2016-08-02 13:22:06

SUPPLIED BY BSB EDGE UNDER LICENCE FROM DIN FOR RAJARAMBAPU INSTITUTE OF TECHNOLOGY - SANGLI DIST. VIDE BSB EDGE ORDER REGISTRATION NO. ORD01-1088 ON 02/08/2016

EN 1994-1-1 Eurocode 4 – Design of composite steel and concrete structures – Part 1-1: General – Common rules and rules for buildings

EN 1995-1-1 Eurocode 5 – Design of timber structures – Part 1-1: General – Common rules and rules for buildings

EN 1996-1-1 Eurocode 6 – Design of masonry structures – Part 1-1: General –Rules for reinforced and unreinforced masonry

EN 1997-1 Eurocode 7 - Geotechnical design – Part 1: General rules

1.2.2 Reference Codes and Standards

(1)P For the application of EN 1998, reference shall be made to ▌AC⟩ EN 1990 to EN 1997 and to EN 1999 ⟨AC▌.

(2) EN 1998 incorporates other normative references cited at the appropriate places in the text. They are listed below:

ISO 1000 The international system of units (SI) and its application;

▌AC⟩ EN 1090-2 Execution of steel structures and aluminium structures – Part 2: Technical requirements for steel structures; ⟨AC▌

▌AC⟩ EN 1993-1-8 Eurocode 3: Design of steel structures – Part 1-8: Design of joints; ⟨AC▌

▌AC⟩ EN 1993-1-10 Eurocode 3: Design of steel structures – Part 1-10: Material toughness and through-thickness properties; ⟨AC▌

prEN 12512 Timber structures – Test methods – Cyclic testing of joints made with mechanical fasteners.

1.3 Assumptions

(1) In addition to the general assumptions of EN 1990:2002, **1.3**, the following assumption applies.

(2)P It is assumed that no change in the structure will take place during the construction phase or during the subsequent life of the structure, unless proper justification and verification is provided. Due to the specific nature of the seismic response this applies even in the case of changes that lead to an increase of the structural resistance.

1.4 Distinction between principles and application rules

(1) The rules of EN 1990:2002, **1.4** apply.

1.5 Terms and definitions

1.5.1 Terms common to all Eurocodes

(1) The terms and definitions given in EN 1990:2002, **1.5** apply.

Sofort-Download-Beuth-Book Supply Bureau-KdNr.7066075-ID.SCBLGSA1OBPULJD3QN0TD2AJ.1-2016-08-02 13:22:06

SUPPLIED BY BSB EDGE UNDER LICENCE FROM DIN FOR RAJARAMBAPU INSTITUTE OF TECHNOLOGY - SANGLI DIST. VIDE BSB EDGE ORDER REGISTRATION NO. ORD01-1088 ON 02/08/2016

1.5.2 ▌AC⟩ Further terms used in EN 1998-1 ⟨AC▐

(1) The following terms are used in ▌AC⟩ EN 1998-1 ⟨AC▐ with the following meanings:

behaviour factor
factor used for design purposes to reduce the forces obtained from a linear analysis, in order to account for the non-linear response of a structure, associated with the material, the structural system and the design procedures

▌AC⟩ capacity design ⟨AC▐
design method in which elements of the structural system are chosen and suitably designed and detailed for energy dissipation under severe deformations while all other structural elements are provided with sufficient strength so that the chosen means of energy dissipation can be maintained

dissipative structure
structure which is able to dissipate energy by means of ductile hysteretic behaviour and/or by other mechanisms

dissipative zones
predetermined parts of a dissipative structure where the dissipative capabilities are mainly located

NOTE 1 These are also called critical regions.

dynamically independent unit
structure or part of a structure which is directly subjected to the ground motion and whose response is not affected by the response of adjacent units or structures

importance factor
factor which relates to the consequences of a structural failure

non-dissipative structure
structure designed for a particular seismic design situation without taking into account the non-linear material behaviour

non-structural element
architectural, mechanical or electrical element, system and component which, whether due to lack of strength or to the way it is connected to the structure, is not considered in the seismic design as load carrying element

primary seismic members
members considered as part of the structural system that resists the seismic action, modelled in the analysis for the seismic design situation and fully designed and detailed for earthquake resistance in accordance with the rules of EN 1998

secondary seismic members
members which are not considered as part of the seismic action resisting system and whose strength and stiffness against seismic actions is neglected

NOTE 2 They are not required to comply with all the rules of EN 1998, but are designed and detailed to maintain support of gravity loads when subjected to the displacements caused by the seismic design situation.

Sofort-Download-Beuth-Book Supply Bureau-KdNr.7066075-ID.SCBLGSA1OBPULJD3QN0TD2AJ.1-2016-08-02 13:22:06

SUPPLIED BY BSB EDGE UNDER LICENCE FROM DIN FOR RAJARAMBAPU INSTITUTE OF TECHNOLOGY - SANGLI DIST. VIDE BSB EDGE ORDER REGISTRATION NO. ORD01-1088 ON 02/08/2016

1.6 Symbols

1.6.1 General

(1) The symbols indicated in EN 1990:2002, **1.6** apply. For the material-dependent symbols, as well as for symbols not specifically related to earthquakes, the provisions of the relevant Eurocodes apply.

(2) Further symbols, used in connection with seismic actions, are defined in the text where they occur, for ease of use. However, in addition, the most frequently occurring symbols used in EN 1998-1 are listed and defined in **1.6.2** and **1.6.3**.

1.6.2 Further symbols used in Sections 2 and 3 of EN 1998-1

A_{Ed} design value of seismic action (= $\gamma_I.A_{Ek}$)

A_{Ek} characteristic value of the seismic action for the reference return period

E_d design value of action effects

N_{SPT} Standard Penetration Test blow-count

P_{NCR} reference probability of exceedance in 50 years of the reference seismic action for the no-collapse requirement

Q variable action

$S_e(T)$ elastic horizontal ground acceleration response spectrum also called "elastic response spectrum". At T=0, the spectral acceleration given by this spectrum equals the design ground acceleration on type A ground multiplied by the soil factor S.

$S_{ve}(T)$ elastic vertical ground acceleration response spectrum

$S_{De}(T)$ elastic displacement response spectrum

$S_d(T)$ [AC〉 design spectrum (for elastic analysis) 〈AC]

S soil factor

T vibration period of a linear single degree of freedom system

T_s duration of the stationary part of the seismic motion

T_{NCR} reference return period of the reference seismic action for the no-collapse requirement

a_{gR} reference peak ground acceleration on type A ground

a_g design ground acceleration on type A ground

a_{vg} design ground acceleration in the vertical direction

c_u undrained shear strength of soil

d_g design ground displacement

g acceleration of gravity

q behaviour factor

$v_{s,30}$ average value of propagation velocity of S waves in the upper 30 m of the soil profile at shear strain of 10^{-5} or less

Sofort-Download-Beuth-Book Supply Bureau-KdNr.7066075-ID.SCBLGSA1OBPULJD3QN0TD2AJ.1-2016-08-02 13:22:06

SUPPLIED BY BSB EDGE UNDER LICENCE FROM DIN FOR RAJARAMBAPU INSTITUTE OF TECHNOLOGY - SANGLI DIST. VIDE BSB EDGE ORDER REGISTRATION NO. ORD01-1088 ON 02/08/2016

γ_I importance factor

η damping correction factor

ξ viscous damping ratio (in percent)

$\psi_{2,i}$ combination coefficient for the quasi-permanent value of a variable action *i*

$\psi_{E,i}$ combination coefficient for a variable action *i*, to be used when determining the effects of the design seismic action

1.6.3 Further symbols used in Section 4 of EN 1998-1

E_E effect of the seismic action

E_{Edx}, E_{Edy} design values of the action effects due to the horizontal components (*x* and *y*) of the seismic action

E_{Edz} design value of the action effects due to the vertical component of the seismic action

F_i horizontal seismic force at storey *i*

F_a horizontal seismic force acting on a non-structural element (appendage)

F_b base shear force

H building height from the foundation or from the top of a rigid basement

L_{max}, L_{min} larger and smaller in plan dimension of the building measured in orthogonal directions

R_d design value of resistance

S_a seismic coefficient for non-structural elements

T_1 fundamental period of vibration of a building

T_a fundamental period of vibration of a non-structural element (appendage)

W_a weight of a non-structural element (appendage)

d displacement

d_r design interstorey drift

e_a accidental eccentricity of the mass of one storey from its nominal location

h interstorey height

m_i mass of storey *i*

n number of storeys above the foundation or the top of a rigid basement

q_a behaviour factor of a non-structural element (appendage)

q_d displacement behaviour factor

s_i displacement of mass m_i in the fundamental mode shape of a building

z_i height of mass m_i above the level of application of the seismic action

α ratio of the design ground acceleration to the acceleration of gravity

γ_a importance factor of a non-structural element (appendage)

Sofort-Download-Beuth-Book Supply Bureau-KdNr.7066075-ID.SCBLGSA1OBPULJD3QN0TD2AJ.1-2016-08-02 13:22:06

SUPPLIED BY BSB EDGE UNDER LICENCE FROM DIN FOR RAJARAMBAPU INSTITUTE OF TECHNOLOGY - SANGLI DIST. VIDE BSB EDGE ORDER REGISTRATION NO. ORD01-1088 ON 02/08/2016

γ_d overstrength factor for diaphragms

θ interstorey drift sensitivity coefficient

1.6.4 Further symbols used in Section 5 of EN 1998-1

A_c Area of section of concrete member

A_{sh} total area of horizontal hoops in a beam-column joint

A_{si} total area of steel bars in each diagonal direction of a coupling beam

A_{st} area of one leg of the transverse reinforcement

A_{sv} total area of the vertical reinforcement in the web of the wall

$A_{sv,i}$ total area of column vertical bars between corner bars in one direction through a joint

A_w total horizontal cross-sectional area of a wall

ΣA_{si} sum of areas of all inclined bars in both directions, in wall reinforced with inclined bars against sliding shear

ΣA_{sj} sum of areas of vertical bars of web in a wall, or of additional bars arranged in the wall boundary elements specifically for resistance against sliding shear

ΣM_{Rb} sum of design values of moments of resistance of the beams framing into a joint in the direction of interest

ΣM_{Rc} sum of design values of the moments of resistance of the columns framing into a joint in the direction of interest

D_o diameter of confined core in a circular column

$M_{i,d}$ end moment of a beam or column for the calculation of its capacity design shear

$M_{Rb,i}$ design value of beam moment of resistance at end i

$M_{Rc,i}$ design value of column moment of resistance at end i

N_{Ed} axial force from the analysis for the seismic design situation

T_1 fundamental period of the building in the horizontal direction of interest

T_C corner period at the upper limit of the constant acceleration region of the elastic spectrum

V'_{Ed} shear force in a wall from the analysis for the seismic design situation

V_{dd} dowel resistance of vertical bars in a wall

V_{Ed} design shear force in a wall

$V_{Ed,max}$ maximum acting shear force at end section of a beam from capacity design calculation

$V_{Ed,min}$ minimum acting shear force at end section of a beam from capacity design calculation

V_{fd} contribution of friction to resistance of a wall against sliding shear

V_{id} contribution of inclined bars to resistance of a wall against sliding shear

Sofort-Download-Beuth-Book Supply Bureau-KdNr.7066075-ID.SCBLGSA1OBPULJD3QN0TD2AJ.1-2016-08-02 13:22:06

SUPPLIED BY BSB EDGE UNDER LICENCE FROM DIN FOR RAJARAMBAPU INSTITUTE OF TECHNOLOGY - SANGLI DIST. VIDE BSB EDGE ORDER REGISTRATION NO. ORD01-1088 ON 02/08/2016

$V_{Rd,c}$ design value of shear resistance for members without shear reinforcement in accordance with EN1992-1-1:2004

$V_{Rd,S}$ design value of shear resistance against sliding

b width of bottom flange of beam

b_c cross-sectional dimension of column

b_{eff} effective flange width of beam in tension at the face of a supporting column

b_i distance between consecutive bars engaged by a corner of a tie or by a cross-tie in a column

b_o width of confined core in a column or in the boundary element of a wall (to centreline of hoops)

b_w thickness of confined parts of a wall section, or width of the web of a beam

b_{wo} thickness of web of a wall

d effective depth of section

d_{bL} longitudinal bar diameter

d_{bw} diameter of hoop

f_{cd} design value of concrete compressive strength

f_{ctm} mean value of tensile strength of concrete

f_{yd} design value of yield strength of steel

$f_{yd,\,h}$ design value of yield strength of the horizontal web reinforcement

$f_{yd,\,v}$ design value of yield strength of the vertical web reinforcement

f_{yld} design value of yield strength of the longitudinal reinforcement

f_{ywd} design value of yield strength of transverse reinforcement

h cross-sectional depth

h_c cross-sectional depth of column in the direction of interest

h_f flange depth

h_{jc} distance between extreme layers of column reinforcement in a beam-column joint

h_{jw} distance between beam top and bottom reinforcement

h_o depth of confined core in a column (to centreline of hoops)

h_s clear storey height

h_w height of wall or cross-sectional depth of beam

k_D factor reflecting the ductility class in the calculation of the required column depth for anchorage of beam bars in a joint, equal to 1 for DCH and to 2/3 for DCM

k_w factor reflecting the prevailing failure mode in structural systems with walls

l_{cl} clear length of a beam or a column

l_{cr} length of critical region

Sofort-Download-Beuth-Book Supply Bureau-KdNr.7066075-ID.SCBLGSA1OBPULJD3QN0TD2AJ.1-2016-08-02 13:22:06

SUPPLIED BY BSB EDGE UNDER LICENCE FROM DIN FOR RAJARAMBAPU INSTITUTE OF TECHNOLOGY - SANGLI DIST. VIDE BSB EDGE ORDER REGISTRATION NO. ORD01-1088 ON 02/08/2016

l_i distance between centrelines of the two sets of inclined bars at the base section of walls with inclined bars against sliding shear

l_w length of cross-section of wall

n total number of longitudinal bars laterally engaged by hoops or cross ties on perimeter of column section

q_o basic value of the behaviour factor

s spacing of transverse reinforcement

x_u neutral axis depth

z internal lever arm

α confinement effectiveness factor, angle between diagonal bars and axis of a coupling beam

α_o prevailing aspect ratio of walls of the structural system

α_1 multiplier of horizontal design seismic action at formation of first plastic hinge in the system

α_u multiplier of horizontal seismic design action at formation of global plastic mechanism

γ_c partial factor for concrete

γ_{Rd} model uncertainty factor on design value of resistances in the estimation of capacity design action effects, accounting for various sources of overstrength

γ_s partial factor for steel

ε_{cu2} ultimate strain of unconfined concrete

$\varepsilon_{cu2,c}$ ultimate strain of confined concrete

$\varepsilon_{su,k}$ characteristic value of ultimate elongation of reinforcing steel

$\varepsilon_{sy,d}$ design value of steel strain at yield

η reduction factor on concrete compressive strength due to tensile strains in transverse direction

ζ ratio, $V_{Ed,min}/V_{Ed,max}$, between the minimum and maximum acting shear forces at the end section of a beam

μ_f concrete-to-concrete friction coefficient under cyclic actions

μ_ϕ curvature ductility factor

μ_δ displacement ductility factor

ν axial force due in the seismic design situation, normalised to $A_c f_{cd}$

ξ normalised neutral axis depth

ρ tension reinforcement ratio

ρ' compression steel ratio in beams

σ_{cm} mean value of concrete normal stress

Sofort-Download-Beuth-Book Supply Bureau-KdNr.7066075-ID.SCBLGSA1OBPULJD3QN0TD2AJ.1-2016-08-02 13:22:06

SUPPLIED BY BSB EDGE UNDER LICENCE FROM DIN FOR RAJARAMBAPU INSTITUTE OF TECHNOLOGY - SANGLI DIST. VIDE BSB EDGE ORDER REGISTRATION NO. ORD01-1088 ON 02/08/2016

ρ_h reinforcement ratio of horizontal web bars in a wall

ρ_l total longitudinal reinforcement ratio

ρ_{max} maximum allowed tension steel ratio in the critical region of primary seismic beams

ρ_v reinforcement ratio of vertical web bars in a wall

ρ_w shear reinforcement ratio

ω_v mechanical ratio of vertical web reinforcement

ω_{wd} mechanical volumetric ratio of confining reinforcement

1.6.5 Further symbols used in Section 6 of EN 1998-1

L beam span

M_{Ed} design bending moment from the analysis for the seismic design situation

$M_{pl,RdA}$ design value of plastic moment resistance at end A of a member

$M_{pl,RdB}$ design value of plastic moment resistance at end B of a member

N_{Ed} design axial force from the analysis for the seismic design situation

$N_{Ed,E}$ axial force from the analysis due to the design seismic action alone

$N_{Ed,G}$ axial force due to the non-seismic actions included in the combination of actions for the seismic design situation

$N_{pl,Rd}$ design value of yield resistance in tension of the gross cross-section of a member in accordance with [AC⟩ EN 1993-1-1:2005 ⟨AC]

$N_{Rd}(M_{Ed},V_{Ed})$ design value of axial resistance of column or diagonal in accordance with [AC⟩ EN 1993-1-1:2005 ⟨AC], taking into account the interaction with the bending moment M_{Ed} and the shear V_{Ed} in the seismic situation

R_d resistance of connection in accordance with [AC⟩ EN 1993-1-1:2005 ⟨AC]

R_{fy} plastic resistance of connected dissipative member based on the design yield stress of material as defined in [AC⟩ EN 1993-1-1:2005 ⟨AC].

V_{Ed} design shear force from the analysis for the seismic design situation

$V_{Ed,G}$ shear force due to the non seismic actions included in the combination of actions for the seismic design situation

$V_{Ed,M}$ shear force due to the application of the plastic moments of resistance at the two ends of a beam

$V_{pl,Rd}$ design value of shear resistance of a member in accordance with [AC⟩ EN 1993-1-1:2005 ⟨AC]

$V_{wp,Ed}$ design shear force in web panel due to the design seismic action effects

$V_{wp,Rd}$ design shear resistance of the web panel in accordance with EN 1993- 1-1:2004

e length of seismic link

f_y nominal yield strength of steel

$f_{y,max}$ [AC⟩ upper value of the yield strength of steel ⟨AC]

Sofort-Download-Beuth-Book Supply Bureau-KdNr.7066075-ID.SCBLGSA1OBPULJD3QN0TD2AJ.1-2016-08-02 13:22:06

SUPPLIED BY BSB EDGE UNDER LICENCE FROM DIN FOR RAJARAMBAPU INSTITUTE OF TECHNOLOGY - SANGLI DIST. VIDE BSB EDGE ORDER REGISTRATION NO. ORD01-1088 ON 02/08/2016

q behaviour factor

t_w web thickness of a seismic link

t_f flange thickness of a seismic link

Ω multiplicative factor on axial force $N_{Ed,E}$ from the analysis due to the design seismic action, for the design of the non-dissipative members in concentric or eccentric braced frames per Cl. **6.7.4** and **6.8.3** respectively

α ratio of the smaller design bending moment $M_{Ed,A}$ at one end of a seismic link to the greater bending moments $M_{Ed,B}$ at the end where plastic hinge forms, both moments taken in absolute value

α_l multiplier of horizontal design seismic action at formation of first plastic hinge in the system

α_u multiplier of horizontal seismic design action at formation of global plastic mechanism

γ_M partial factor for material property

γ_{ov} material overstrength factor

δ beam deflection at midspan relative to tangent to beam axis at beam end (see Figure 6.11)

γ_{pb} multiplicative factor on design value $N_{pl,Rd}$ of yield resistance in tension of compression brace in a V bracing, for the estimation of the unbalanced seismic action effect on the beam to which the bracing is connected

γ_s partial factor for steel

θ_p rotation capacity of the plastic hinge region

$\bar{\lambda}$ non-dimensional slenderness of a member as defined in [AC⟩ EN 1993-1-1:2005 ⟨AC]

1.6.6 Further symbols used in Section 7 of EN 1998-1

A_{pl} horizontal area of the plate

E_a Modulus of Elasticity of steel

E_{cm} mean value of Modulus of Elasticity of concrete in accordance with EN 1992-1-1:2004

I_a second moment of area of the steel section part of a composite section, with respect to the centroid of the composite section

I_c second moment of area of the concrete part of a composite section, with respect to the centroid of the composite section

I_{eq} equivalent second moment of area of the composite section

I_s second moment of area of the rebars in a composite section, with respect to the centroid of the composite section

$M_{pl,Rd,c}$ design value of plastic moment resistance of column, taken as lower bound and computed taking into account the concrete component of the section and only the steel components of the section classified as ductile

Sofort-Download-Beuth-Book Supply Bureau-KdNr.7066075-ID.SCBLGSA1OBPULJD3QN0TD2AJ.1-2016-08-02 13:22:06

SUPPLIED BY BSB EDGE UNDER LICENCE FROM DIN FOR RAJARAMBAPU INSTITUTE OF TECHNOLOGY - SANGLI DIST. VIDE BSB EDGE ORDER REGISTRATION NO. ORD01-1088 ON 02/08/2016

$M_{U,Rd,b}$ upper bound plastic resistance of beam, computed taking into account the concrete component of the section and all the steel components in the section, including those not classified as ductile

$V_{wp,Ed}$ design shear force in web panel, computed on the basis of the plastic resistance of the adjacent dissipative zones in beams or connections

$V_{wp,Rd}$ design shear resistance of the composite steel-concrete web panel in accordance with EN 1994-1-1:2004

b width of the flange

b_b width of composite beam (see Figure 7.3a) or bearing width of the concrete of the slab on the column (see Figure 7.7).

b_e partial effective width of flange on each side of the steel web

b_{eff} total effective width of concrete flange

b_o width (minimum dimension) of confined concrete core (to centreline of hoops)

d_{bL} diameter of longitudinal rebars

d_{bw} diameter of hoops

f_{yd} design yield strength of steel

f_{ydf} design yield strength of steel in the flange

f_{ydw} design strength of web reinforcement

h_b depth of composite beam

h_c depth of composite column section

k_r rib shape efficiency factor of profiled steel sheeting

k_t reduction factor of design shear resistance of connectors in accordance with EN 1994-1-1:2004

l_{cl} clear length of column

l_{cr} length of critical region

n steel-to-concrete modular ratio for short term actions

q behaviour factor

r reduction factor on concrete rigidity for the calculation of the stiffness of composite columns

t_f thickness of flange

γ_c partial factor for concrete

γ_M partial factor for material property

γ_{ov} material overstrength factor

γ_s partial factor for steel

ε_a total strain of steel at Ultimate Limit State

ε_{cu2} ultimate compressive strain of unconfined concrete

η minimum degree of connection as defined in **6.6.1.2** of EN 1994-1-1:2004

Sofort-Download-Beuth-Book Supply Bureau-KdNr.7066075-ID.SCBLGSA1OBPULJD3QN0TD2AJ.1-2016-08-02 13:22:06

SUPPLIED BY BSB EDGE UNDER LICENCE FROM DIN FOR RAJARAMBAPU INSTITUTE OF TECHNOLOGY - SANGLI DIST. VIDE BSB EDGE ORDER REGISTRATION NO. ORD01-1088 ON 02/08/2016

1.6.7 Further symbols used in Section 8 of EN 1998-1

E_o Modulus of Elasticity of timber for instantaneous loading

b width of timber section

d fastener-diameter

h depth of timber beams

k_{mod} modification factor for instantaneous loading on strength of timber in accordance with EN 1995-1-1:2004

q behaviour factor

γ_M partial factor for material properties

1.6.8 Further symbols used in Section 9 of EN 1998-1

$a_{g,urm}$ upper value of the design ground acceleration at the site for use of unreinforced masonry satisfying the provisions of Eurocode 8

A_{min} total cross-section area of masonry walls required in each horizontal direction for the rules for "simple masonry buildings" to apply

$f_{b,min}$ ⟦AC⟩ normalised compressive strength of masonry units normal to the bed face ⟨AC⟧

$f_{bh,min}$ ⟦AC⟩ normalised compressive strength of masonry units parallel to the bed face in the plane of the wall ⟨AC⟧

$f_{m,min}$ minimum strength for mortar

h greater clear height of the openings adjacent to the wall

h_{ef} effective height of the wall

l length of the wall

n number of storeys above ground

$p_{A,min}$ Minimum sum of horizontal cross-sectional areas of shear walls in each direction, as percentage of the total floor area per storey

p_{max} percentage of the total floor area above the level

q behaviour factor

t_{ef} effective thickness of the wall

$\Delta_{A,max}$ maximum difference in horizontal shear wall cross-sectional area between adjacent storeys of "simple masonry buildings"

$\Delta_{m,max}$ maximum difference in mass between adjacent storeys of "simple masonry buildings"

γ_m partial factors for masonry properties

γ_s partial factor for reinforcing steel

λ_{min} ratio between the length of the small and the length of the long side in plan

Sofort-Download-Beuth-Book Supply Bureau-KdNr.7066075-ID.SCBLGSA1OBPULJD3QN0TD2AJ.1-2016-08-02 13:22:06

SUPPLIED BY BSB EDGE UNDER LICENCE FROM DIN FOR RAJARAMBAPU INSTITUTE OF TECHNOLOGY - SANGLI DIST. VIDE BSB EDGE ORDER REGISTRATION NO. ORD01-1088 ON 02/08/2016

1.6.9 Further symbols used in Section 10 of EN 1998-1

K_{eff} effective stiffness of the isolation system in the principal horizontal direction under consideration, at a displacement equal to the design displacement d_{dc}

K_V total stiffness of the isolation system in the vertical direction

K_{xi} effective stiffness of a given unit i in the x direction

K_{yi} effective stiffness of a given unit i in the y direction

T_{eff} effective fundamental period of the superstructure corresponding to horizontal translation, the superstructure assumed as a rigid body

T_f fundamental period of the superstructure assumed fixed at the base

T_V fundamental period of the superstructure in the vertical direction, the superstructure assumed as a rigid body

M mass of the superstructure

M_s magnitude

d_{dc} design displacement of the effective stiffness centre in the direction considered

d_{db} total design displacement of an isolator unit

$e_{tot,y}$ total eccentricity in the y direction

f_j horizontal forces at each level j

r_y torsional radius of the isolation system

(x_i,y_i) co-ordinates of the isolator unit i relative to the effective stiffness centre

δ_i amplification factor

ξ_{eff} "effective damping"

1.7 S.I. Units

(1)P S.I. Units in accordance with ISO 1000 shall be used.

(2) For calculations, the following units are recommended:

- forces and loads: kN, kN/m, kN/m^2
- unit mass: kg/m^3, [AC⟩ tonne/m^3 ⟨AC]
- mass: kg, [AC⟩ tonne ⟨AC]
- unit weight: kN/m^3
- stresses and strengths: N/mm^2 (= MN/m^2 or MPa), kN/m^2 (=kPa)
- moments (bending, etc): kNm
- acceleration: m/s^2, g (=9,81 m/s^2)

Sofort-Download-Beuth-Book Supply Bureau-KdNr.7066075-ID.SCBLGSA1OBPULJD3QN0TD2AJ.1-2016-08-02 13:22:06

SUPPLIED BY BSB EDGE UNDER LICENCE FROM DIN FOR RAJARAMBAPU INSTITUTE OF TECHNOLOGY - SANGLI DIST. VIDE BSB EDGE ORDER REGISTRATION NO. ORD01-1088 ON 02/08/2016

SUPPLIED BY BSB EDGE UNDER LICENCE FROM DIN FOR RAJARAMBAPU INSTITUTE OF TECHNOLOGY - SANGLI DIST. VIDE BSB EDGE ORDER REGISTRATION NO. ORD01-1088 ON 02/08/2016

Sofort-Download-Beuth-Book Supply Bureau-KdNr.7066075-ID.SCBLGSA1OBPULJD3QN0TD2AJ.1-2016-08-02 13:22:06

2 PERFORMANCE REQUIREMENTS AND COMPLIANCE CRITERIA

2.1 Fundamental requirements

(1)P Structures in seismic regions shall be designed and constructed in such a way that the following requirements are met, each with an adequate degree of reliability.

– No-collapse requirement.

The structure shall be designed and constructed to withstand the design seismic action defined in Section **3** without local or global collapse, thus retaining its structural integrity and a residual load bearing capacity after the seismic events. The design seismic action is expressed in terms of: a) the reference seismic action associated with a reference probability of exceedance, P_{NCR}, in 50 years or a reference return period, T_{NCR}, and b) the importance factor γ_I (see EN 1990:2002 and **(2)**P and **(3)**P of this clause) to take into account reliability differentiation.

NOTE 1 The values to be ascribed to P_{NCR} or to T_{NCR} for use in a country may be found in its National Annex of this document. The recommended values are P_{NCR} =10% and T_{NCR} = 475 years.

NOTE 2 The value of the probability of exceedance, P_R, in T_L years of a specific level of the seismic action is related to the mean return period, T_R, of this level of the seismic action in accordance with the expression $T_R = -T_L / \ln(1- P_R)$. So for a given T_L, the seismic action may equivalently be specified either via its mean return period, T_R, or its probability of exceedance, P_R in T_L years.

– Damage limitation requirement.

The structure shall be designed and constructed to withstand a seismic action having a larger probability of occurrence than the design seismic action, without the occurrence of damage and the associated limitations of use, the costs of which would be disproportionately high in comparison with the costs of the structure itself. The seismic action to be taken into account for the "damage limitation requirement" has a probability of exceedance, P_{DLR}, in 10 years and a return period, T_{DLR}. In the absence of more precise information, the reduction factor applied on the design seismic action in accordance with **4.4.3.2(2)** may be used to obtain the seismic action for the verification of the damage limitation requirement.

NOTE 3 The values to be ascribed to P_{DLR} or to T_{DLR} for use in a country may be found in its National Annex of this document. The recommended values are P_{DLR} =10% and T_{DLR} = 95 years.

(2)P Target reliabilities for the no-collapse requirement and for the damage limitation requirement are established by the National Authorities for different types of buildings or civil engineering works on the basis of the consequences of failure.

(3)P Reliability differentiation is implemented by classifying structures into different importance classes. An importance factor γ_I is assigned to each importance class. Wherever feasible this factor should be derived so as to correspond to a higher or lower value of the return period of the seismic event (with regard to the reference return period) as appropriate for the design of the specific category of structures (see **3.2.1(3)**).

(4) The different levels of reliability are obtained by multiplying the reference seismic action or, when using linear analysis, the corresponding action effects by this importance factor. Detailed guidance on the importance classes and the corresponding importance factors is given in the relevant Parts of EN 1998.

NOTE At most sites the annual rate of exceedance, $H(a_{gR})$, of the reference peak ground acceleration a_{gR} may be taken to vary with a_{gR} as: $H(a_{gR}) \sim k_0\, a_{gR}^{-k}$, with the value of the exponent k depending on seismicity, but being generally of the order of 3. Then, if the seismic action is defined in terms of the reference peak ground acceleration a_{gR}, the value of the importance factor γ_I multiplying the reference seismic action to achieve the same probability of exceedance in T_L years as in the T_{LR} years for which the reference seismic action is defined, may be computed as $\gamma_I \sim (T_{LR}/T_L)^{-1/k}$. Alternatively, the value of the importance factor γ_I that needs to multiply the reference seismic action to achieve a value of the probability of exceeding the seismic action, P_L, in T_L years other than the reference probability of exceedance P_{LR}, over the same T_L years, may be estimated as $\gamma_I \sim (P_L/P_{LR})^{-1/k}$.

2.2 Compliance Criteria

2.2.1 General

(1)P In order to satisfy the fundamental requirements in **2.1** the following limit states shall be checked (see **2.2.2** and **2.2.3**):

– ultimate limit states;

– damage limitation states.

Ultimate limit states are those associated with collapse or with other forms of structural failure which might endanger the safety of people.

Damage limitation states are those associated with damage beyond which specified service requirements are no longer met.

(2)P In order to limit the uncertainties and to promote a good behaviour of structures under seismic actions more severe than the design seismic action, a number of pertinent specific measures shall also be taken (see **2.2.4**).

(3) For well defined categories of structures in cases of low seismicity (see **3.2.1(4)**), the fundamental requirements may be satisfied through the application of rules simpler than those given in the relevant Parts of EN 1998.

(4) In cases of very low seismicity, the provisions of EN 1998 need not be observed (see **3.2.1(5)** and the notes therein for the definition of cases of very low seismicity).

(5) Specific rules for "simple masonry buildings" are given in Section **9**. By conforming to these rules, such "simple masonry buildings" are deemed to satisfy the fundamental requirements of EN 1998-1 without analytical safety verifications.

2.2.2 Ultimate limit state

(1)P It shall be verified that the structural system has the resistance and energy-dissipation capacity specified in the relevant Parts of EN 1998.

Sofort-Download-Beuth-Book Supply Bureau-KdNr.7066075-ID.SCBLGSA1OBPULJD3QN0TD2AJ.1-2016-08-02 13:22:06

SUPPLIED BY BSB EDGE UNDER LICENCE FROM DIN FOR RAJARAMBAPU INSTITUTE OF TECHNOLOGY - SANGLI DIST. VIDE BSB EDGE ORDER REGISTRATION NO. ORD01-1088 ON 02/08/2016

(2) The resistance and energy-dissipation capacity to be assigned to the structure are related to the extent to which its non-linear response is to be exploited. In operational terms such balance between resistance and energy-dissipation capacity is characterised by the values of the behaviour factor q and the associated ductility classification, which are given in the relevant Parts of EN 1998. As a limiting case, for the design of structures classified as low-dissipative, no account is taken of any hysteretic energy dissipation and the behaviour factor may not be taken, in general, as being greater than the value of 1,5 considered to account for overstrengths. For steel or composite steel concrete buildings, this limiting value of the q factor may be taken as being between 1,5 and 2 (see Note 1 of Table 6.1 or Note 1 of Table 7.1, respectively). For dissipative structures the behaviour factor is taken as being greater than these limiting values accounting for the hysteretic energy dissipation that mainly occurs in specifically designed zones, called dissipative zones or critical regions.

NOTE The value of the behaviour factor q should be limited by the limit state of dynamic stability of the structure and by the damage due to low-cycle fatigue of structural details (especially connections). The most ▌AC〉 unfavourable limiting condition should be applied 〈AC▐ when the values of the q factor are determined. The values of the q factor given in the various Parts of EN 1998 are deemed to conform to this requirement.

(3)P The structure as a whole shall be checked to ensure that it is stable under the design seismic action. Both overturning and sliding stability shall be taken into account. Specific rules for checking the overturning of structures are given in the relevant Parts of EN 1998.

(4)P It shall be verified that both the foundation elements and the foundation soil are able to resist the action effects resulting from the response of the superstructure without substantial permanent deformations. In determining the reactions, due consideration shall be given to the actual resistance that can be developed by the structural element transmitting the actions.

(5)P In the analysis the possible influence of second order effects on the values of the action effects shall be taken into account.

(6)P It shall be verified that under the design seismic action the behaviour of non-structural elements does not present risks to persons and does not have a detrimental effect on the response of the structural elements. For buildings, specific rules are given in **4.3.5** and **4.3.6**.

2.2.3 Damage limitation state

(1)P An adequate degree of reliability against unacceptable damage shall be ensured by satisfying the deformation limits or other relevant limits defined in the relevant Parts of EN 1998.

(2)P In structures important for civil protection the structural system shall be verified to ensure that it has sufficient resistance and stiffness to maintain the function of the vital services in the facilities for a seismic event associated with an appropriate return period.

Sofort-Download-Beuth-Book Supply Bureau-KdNr.7066075-ID.SCBLGSA1OBPULJD3QN0TD2AJ.1-2016-08-02 13:22:06

SUPPLIED BY BSB EDGE UNDER LICENCE FROM DIN FOR RAJARAMBAPU INSTITUTE OF TECHNOLOGY - SANGLI DIST. VIDE BSB EDGE ORDER REGISTRATION NO. ORD01-1088 ON 02/08/2016

2.2.4 Specific measures

2.2.4.1 Design

(1) To the extent possible, structures should have simple and regular forms both in plan and elevation, (see **4.2.3**). If necessary this may be realised by subdividing the structure by joints into dynamically independent units.

(2)P In order to ensure an overall dissipative and ductile behaviour, brittle failure or the premature formation of unstable mechanisms shall be avoided. To this end, where required in the relevant Parts of EN 1998, resort shall be made to the capacity design procedure, which is used to obtain the hierarchy of resistance of the various structural components and failure modes necessary for ensuring a suitable plastic mechanism and for avoiding brittle failure modes.

(3)P Since the seismic performance of a structure is largely dependent on the behaviour of its critical regions or elements, the detailing of the structure in general and of these regions or elements in particular, shall be such as to maintain the capacity to transmit the necessary forces and to dissipate energy under cyclic conditions. To this end, the detailing of connections between structural elements and of regions where non-linear behaviour is foreseeable should receive special care in design.

(4)P The analysis shall be based on an adequate structural model, which, when necessary, shall take into account the influence of soil deformability and of non-structural elements and other aspects, such as the presence of adjacent structures.

2.2.4.2 Foundations

(1)P The stiffness of the foundations shall be adequate for transmitting the actions received from the superstructure to the ground as uniformly as possible.

(2) With the exception of bridges, only one foundation type should in general be used for the same structure, unless the latter consists of dynamically independent units.

2.2.4.3 Quality system plan

(1)P The design documents shall indicate the sizes, the details and the characteristics of the materials of the structural elements. If appropriate, the design documents shall also include the characteristics of special devices to be used and the distances between structural and non-structural elements. The necessary quality control provisions shall also be given.

(2)P Elements of special structural importance requiring special checking during construction shall be identified on the design drawings. In this case the checking methods to be used shall also be specified.

(3) In regions of high seismicity and in structures of special importance, formal quality system plans, covering design, construction, and use, additional to the control procedures prescribed in the other relevant Eurocodes, should be used.

Sofort-Download-Beuth-Book Supply Bureau-KdNr.7066075-ID.SCBLGSA1OBPULJD3QN0TD2AJ.1-2016-08-02 13:22:06

SUPPLIED BY BSB EDGE UNDER LICENCE FROM DIN FOR RAJARAMBAPU INSTITUTE OF TECHNOLOGY - SANGLI DIST. VIDE BSB EDGE ORDER REGISTRATION NO. ORD01-1088 ON 02/08/2016

SUPPLIED BY BSB EDGE UNDER LICENCE FROM DIN FOR RAJARAMBAPU INSTITUTE OF TECHNOLOGY - SANGLI DIST. VIDE BSB EDGE ORDER REGISTRATION NO. ORD01-1088 ON 02/08/2016

Sofort-Download-Beuth-Book Supply Bureau-KdNr.7066075-ID.SCBLGSA1OBPULJD3QN0TD2AJ.1-2016-08-02 13:22:06

3 GROUND CONDITIONS AND SEISMIC ACTION

3.1 Ground conditions

3.1.1 General

(1)P Appropriate investigations shall be carried out in order to identify the ground conditions in accordance with the types given in **3.1.2**.

(2) Further guidance concerning ground investigation and classification is given in EN 1998-5:2004, **4.2**.

(3) The construction site and the nature of the supporting ground should normally be free from risks of ground rupture, slope instability and permanent settlements caused by liquefaction or densification in the event of an earthquake. The possibility of occurrence of such phenomena shall be investigated in accordance with EN 1998-5:2004, Section **4**.

(4) Depending on the importance class of the structure and the particular conditions of the project, ground investigations and/or geological studies should be performed to determine the seismic action.

NOTE The conditions under which ground investigations additional to those necessary for design for non-seismic actions may be omitted and default ground classification may be used may be specified in the National Annex.

3.1.2 Identification of ground types

(1) Ground types A, B, C, D, and E, described by the stratigraphic profiles and parameters given in Table 3.1 and described hereafter, may be used to account for the influence of local ground conditions on the seismic action. This may also be done by additionally taking into account the influence of deep geology on the seismic action.

NOTE The ground classification scheme accounting for deep geology for use in a country may be specified in its National Annex, including the values of the parameters S, T_B, T_C and T_D defining the horizontal and vertical elastic response spectra in accordance with **3.2.2.2** and **3.2.2.3**.

Table 3.1: Ground types

Ground type	Description of stratigraphic profile	Parameters		
		$v_{s,30}$ (m/s)	N_{SPT} (blows/30cm)	c_u (kPa)
A	Rock or other rock-like geological formation, including at most 5 m of weaker material at the surface.	> 800	–	–
B	Deposits of very dense sand, gravel, or very stiff clay, at least several tens of metres in thickness, characterised by a gradual increase of mechanical properties with depth.	360 – 800	> 50	> 250
C	Deep deposits of dense or medium-dense sand, gravel or stiff clay with thickness from several tens to many hundreds of metres.	180 – 360	15 - 50	70 - 250
D	Deposits of loose-to-medium cohesionless soil (with or without some soft cohesive layers), or of predominantly soft-to-firm cohesive soil.	< 180	< 15	< 70
E	A soil profile consisting of a surface alluvium layer with v_s values of type C or D and thickness varying between about 5 m and 20 m, underlain by stiffer material with v_s > 800 m/s.			
S_1	Deposits consisting, or containing a layer at least 10 m thick, of soft clays/silts with a high plasticity index (PI > 40) and high water content	< 100 (indicative)	–	10 - 20
S_2	Deposits of liquefiable soils, of sensitive clays, or any other soil profile not included in types A – E or S_1			

(2) The site should be classified according to the value of the average shear wave velocity, $v_{s,30}$, if this is available. Otherwise the value of N_{SPT} should be used.

(3) The average shear wave velocity $v_{s,30}$ should be computed in accordance with the following expression:

$$v_{s,30} = \frac{30}{\sum_{i=1,N} \frac{h_i}{v_i}} \tag{3.1}$$

Sofort-Download-Beuth-Book Supply Bureau-KdNr.7066075-ID.SCBLGSA1OBPULJD3QN0TD2AJ.1-2016-08-02 13:22:06

SUPPLIED BY BSB EDGE UNDER LICENCE FROM DIN FOR RAJARAMBAPU INSTITUTE OF TECHNOLOGY - SANGLI DIST. VIDE BSB EDGE ORDER REGISTRATION NO. ORD01-1088 ON 02/08/2016

where h_i and v_i denote the thickness (in metres) and shear-wave velocity (at a shear strain level of 10^{-5} or less) of the *i*-th formation or layer, in a total of *N*, existing in the top 30 m.

(4)P For sites with ground conditions matching either one of the two special ground types S_1 or S_2, special studies for the definition of the seismic action are required. For these types, and particularly for S_2, the possibility of soil failure under the seismic action shall be taken into account.

NOTE Special attention should be paid if the deposit is of ground type S_1. Such soils typically have very low values of v_s, low internal damping and an abnormally extended range of linear behaviour and can therefore produce anomalous seismic site amplification and soil-structure interaction effects (see EN 1998-5:2004, Section **6**). In this case, a special study to define the seismic action should be carried out, in order to establish the dependence of the response spectrum on the thickness and v_s value of the soft clay/silt layer and on the stiffness contrast between this layer and the underlying materials.

3.2 Seismic action

3.2.1 Seismic zones

(1)P For the purpose of EN 1998, national territories shall be subdivided by the National Authorities into seismic zones, depending on the local hazard. By definition, the hazard within each zone is assumed to be constant.

(2) For most of the applications of EN 1998, the hazard is described in terms of a single parameter, i.e. the value of the reference peak ground acceleration on type A ground, a_{gR}. Additional parameters required for specific types of structures are given in the relevant Parts of EN 1998.

NOTE The reference peak ground acceleration on type A ground, a_{gR}, for use in a country or parts of the country, may be derived from zonation maps found in its National Annex.

(3) The reference peak ground acceleration, chosen by the National Authorities for each seismic zone, corresponds to the reference return period T_{NCR} of the seismic action for the no-collapse requirement (or equivalently the reference probability of exceedance in 50 years, P_{NCR}) chosen by the National Authorities (see **2.1(1)**P). An importance factor γ_I equal to 1,0 is assigned to this reference return period. For return periods other than the reference (see importance classes in **2.1(3)**P and **(4)**), the design ground acceleration on type A ground a_g is equal to a_{gR} times the importance factor γ_I ($a_g = \gamma_I . a_{gR}$). (See Note to **2.1(4))**.

(4) In cases of low seismicity, reduced or simplified seismic design procedures for certain types or categories of structures may be used.

NOTE The selection of the categories of structures, ground types and seismic zones in a country for which the provisions of low seismicity apply may be found in its National Annex. It is recommended to consider as low seismicity cases either those in which the design ground acceleration on type A ground, a_g, is not greater than 0,08 g (0,78 m/s^2), or those where the product $a_g.S$ is not greater than 0,1 g (0,98 m/s^2). The selection of whether the value of a_g, or that of the product $a_g.S$ will be used in a country to define the threshold for low seismicity cases, may be found in its National Annex.

(5)P In cases of very low seismicity, the provisions of EN 1998 need not be observed.

Sofort-Download-Beuth-Book Supply Bureau-KdNr.7066075-ID.SCBLGSA1OBPULJD3QN0TD2AJ.1-2016-08-02 13:22:06

SUPPLIED BY BSB EDGE UNDER LICENCE FROM DIN FOR RAJARAMBAPU INSTITUTE OF TECHNOLOGY - SANGLI DIST. VIDE BSB EDGE ORDER REGISTRATION NO. ORD01-1088 ON 02/08/2016

NOTE The selection of the categories of structures, ground types and seismic zones in a country for which the EN 1998 provisions need not be observed (cases of very low seismicity) may be found in its National Annex. It is recommended to consider as very low seismicity cases either those in which the design ground acceleration on type A ground, a_g, is not greater than 0,04 g (0,39 m/s^2), or those where the product $a_g.S$ is not greater than 0,05 g (0,49 m/s^2). The selection of whether the value of a_g, or that of the product $a_g.S$ will be used in a country to define the threshold for very low seismicity cases, can be found in its National Annex.

3.2.2 Basic representation of the seismic action

3.2.2.1 General

(1)P Within the scope of EN 1998 the earthquake motion at a given point on the surface is represented by an elastic ground acceleration response spectrum, henceforth called an "elastic response spectrum".

(2) The shape of the elastic response spectrum is taken as being the same for the two levels of seismic action introduced in **2.1(1)**P and **2.2.1(1)**P for the no-collapse requirement (ultimate limit state – design seismic action) and for the damage limitation requirement.

(3)P The horizontal seismic action is described by two orthogonal components assumed as being independent and represented by the same response spectrum.

(4) For the three components of the seismic action, one or more alternative shapes of response spectra may be adopted, depending on the seismic sources and the earthquake magnitudes generated from them.

NOTE 1 The selection of the shape of the elastic response spectrum to be used in a country or part of the country may be found in its National Annex.

NOTE 2 In selecting the appropriate shape of the spectrum, consideration should be given to the magnitude of earthquakes that contribute most to the seismic hazard defined for the purpose of probabilistic hazard assessment, rather than on conservative upper limits (e.g. the Maximum Credible Earthquake) defined for that purpose.

(5) When the earthquakes affecting a site are generated by widely differing sources, the possibility of using more than one shape of spectra should be considered to enable the design seismic action to be adequately represented. In such circumstances, different values of a_g will normally be required for each type of spectrum and earthquake.

(6) For important structures (γ_I >1,0) topographic amplification effects should be taken into account.

NOTE Informative Annex A of EN 1998-5:2004 provides information for topographic amplification effects.

(7) Time-history representations of the earthquake motion may be used (see **3.2.3**).

(8) Allowance for the variation of ground motion in space as well as time may be required for specific types of structures (see EN 1998-2, EN 1998-4 and EN 1998-6).

Sofort-Download-Beuth-Book Supply Bureau-KdNr.7066075-ID.SCBLGSA1OBPULJD3QN0TD2AJ.1-2016-08-02 13:22:06

SUPPLIED BY BSB EDGE UNDER LICENCE FROM DIN FOR RAJARAMBAPU INSTITUTE OF TECHNOLOGY - SANGLI DIST. VIDE BSB EDGE ORDER REGISTRATION NO. ORD01-1088 ON 02/08/2016

SUPPLIED BY BSB EDGE UNDER LICENCE FROM DIN FOR RAJARAMBAPU INSTITUTE OF TECHNOLOGY - SANGLI DIST. VIDE BSB EDGE ORDER REGISTRATION NO. ORD01-1088 ON 02/08/2016

Sofort-Download-Beuth-Book Supply Bureau-KdNr.7066075-ID.SCBLGSA1OBPULJD3QN0TD2AJ.1-2016-08-02 13:22:06

3.2.2.2 Horizontal elastic response spectrum

(1)P For the horizontal components of the seismic action, the elastic response spectrum $S_e(T)$ is defined by the following expressions (see Figure. 3.1):

$$0 \le T \le T_B : \; S_e(T) = a_g \cdot S \cdot \left[1 + \frac{T}{T_B} \cdot (\eta \cdot 2{,}5 - 1) \right] \tag{3.2}$$

$$T_B \le T \le T_C : \; S_e(T) = a_g \cdot S \cdot \eta \cdot 2{,}5 \tag{3.3}$$

$$T_C \le T \le T_D : \; S_e(T) = a_g \cdot S \cdot \eta \cdot 2{,}5 \left[\frac{T_C}{T} \right] \tag{3.4}$$

$$T_D \le T \le 4\text{s} : \; S_e(T) = a_g \cdot S \cdot \eta \cdot 2{,}5 \left[\frac{T_C T_D}{T^2} \right] \tag{3.5}$$

where

$S_e(T)$ is the elastic response spectrum;

T is the vibration period of a linear single-degree-of-freedom system;

a_g is the design ground acceleration on type A ground ($a_g = \gamma_I . a_{gR}$);

T_B is the lower limit of the period of the constant spectral acceleration branch;

T_C is the upper limit of the period of the constant spectral acceleration branch;

T_D is the value defining the beginning of the constant displacement response range of the spectrum;

S is the soil factor;

η is the damping correction factor with a reference value of $\eta = 1$ for 5% viscous damping, see (**3**) of this subclause.

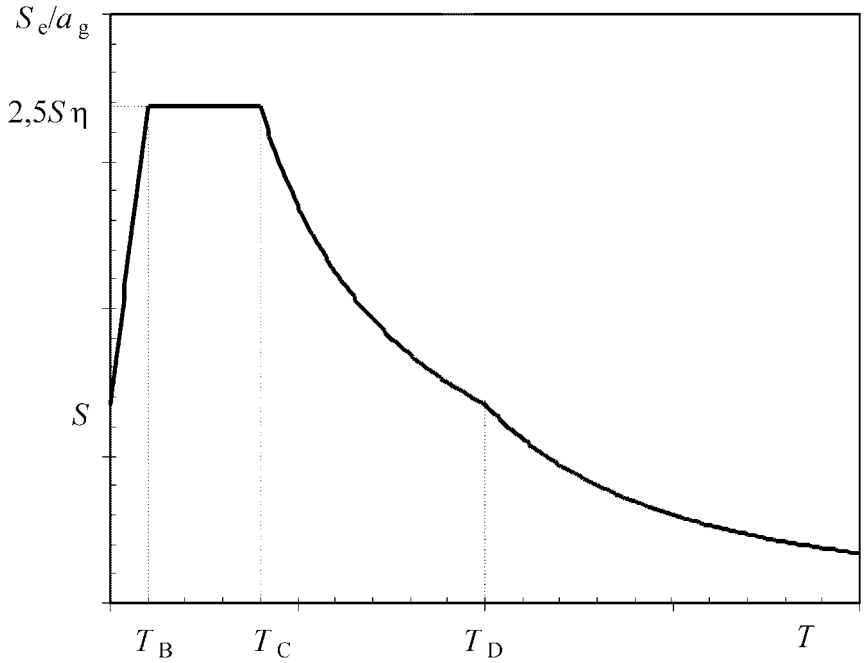

Figure 3.1: Shape of the elastic response spectrum

(2)P The values of the periods T_B, T_C and T_D and of the soil factor S describing the shape of the elastic response spectrum depend upon the ground type.

NOTE 1 The values to be ascribed to T_B, T_C, T_D and S for each ground type and type (shape) of spectrum to be used in a country may be found in its National Annex. If deep geology is not accounted for (see **3.1.2(1)**), the recommended choice is the use of two types of spectra: Type 1 and Type 2. If the earthquakes that contribute most to the seismic hazard defined for the site for the purpose of probabilistic hazard assessment have a surface-wave magnitude, M_s, not greater than 5,5, it is recommended that the Type 2 spectrum is adopted. For the five ground types A, B, C, D and E the recommended values of the parameters S, T_B, T_C and T_D are given in Table 3.2 for the Type 1 Spectrum and in Table 3.3 for the Type 2 Spectrum. Figure 3.2 and Figure 3.3 show the shapes of the recommended Type 1 and Type 2 spectra, respectively, normalised by a_g, for 5% damping. Different spectra may be defined in the National Annex, if deep geology is accounted for.

Table 3.2: Values of the parameters describing the recommended Type 1 elastic response spectra

Ground type	S	T_B (s)	T_C (s)	T_D (s)
A	1,0	0,15	0,4	2,0
B	1,2	0,15	0,5	2,0
C	1,15	0,20	0,6	2,0
D	1,35	0,20	0,8	2,0
E	1,4	0,15	0,5	2,0

Sofort-Download-Beuth-Book Supply Bureau-KdNr.7066075-ID.SCBLGSA1OBPULJD3QN0TD2AJ.1-2016-08-02 13:22:06

SUPPLIED BY BSB EDGE UNDER LICENCE FROM DIN FOR RAJARAMBAPU INSTITUTE OF TECHNOLOGY - SANGLI DIST. VIDE BSB EDGE ORDER REGISTRATION NO. ORD01-1088 ON 02/08/2016

Table 3.3: Values of the parameters describing the recommended Type 2 elastic response spectra

Ground type	S	T_B (s)	T_C (s)	T_D (s)
A	1,0	0,05	0,25	1,2
B	1,35	0,05	0,25	1,2
C	1,5	0,10	0,25	1,2
D	1,8	0,10	0,30	1,2
E	1,6	0,05	0,25	1,2

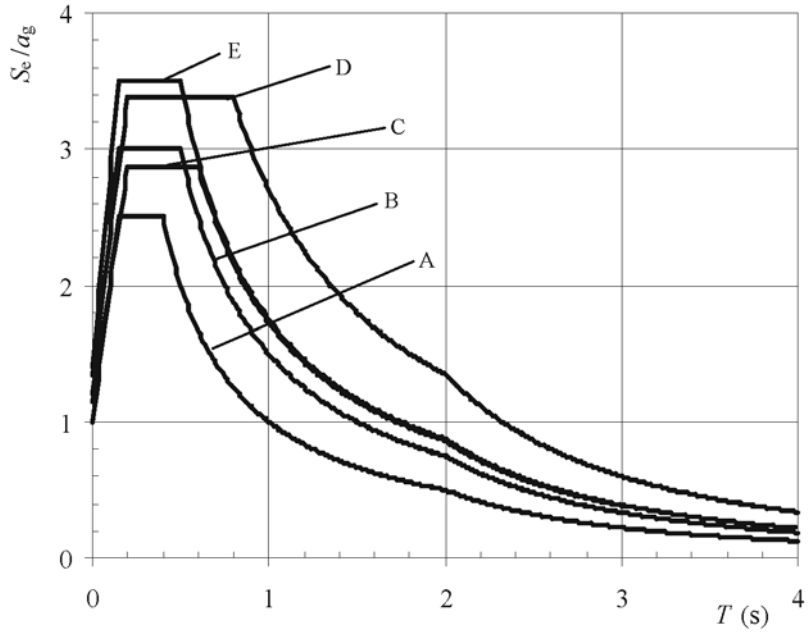

Figure 3.2: Recommended Type 1 elastic response spectra for ground types A to E (5% damping)

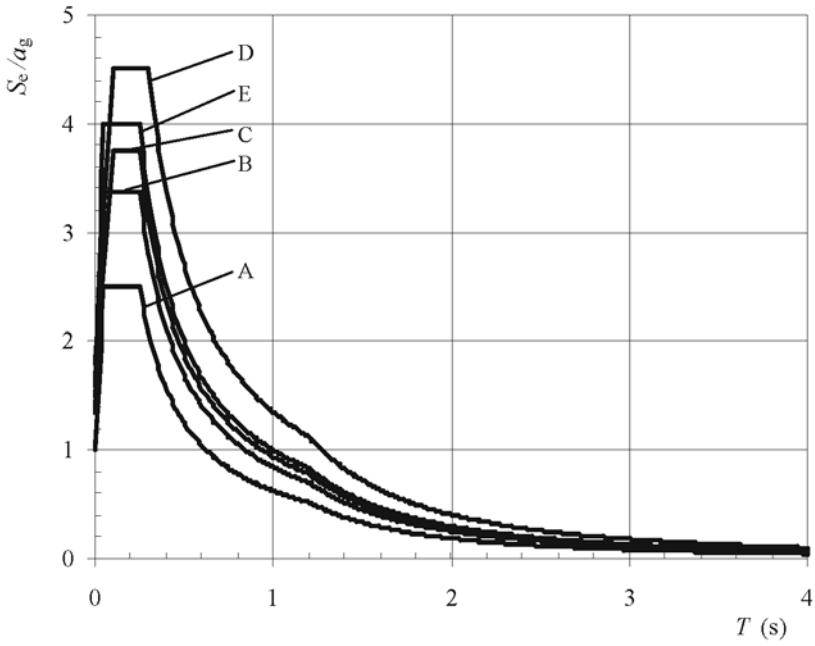

Figure 3.3: Recommended Type 2 elastic response spectra for ground types A to E (5% damping)

Sofort-Download-Beuth-Book Supply Bureau-KdNr.7066075-ID.SCBLGSA1OBPULJD3QN0TD2AJ.1-2016-08-02 13:22:06

SUPPLIED BY BSB EDGE UNDER LICENCE FROM DIN FOR RAJARAMBAPU INSTITUTE OF TECHNOLOGY - SANGLI DIST. VIDE BSB EDGE ORDER REGISTRATION NO. ORD01-1088 ON 02/08/2016

Note 2 For ground types S_1 and S_2, special studies should provide the corresponding values of S, T_B, T_C and T_D.

(3) The value of the damping correction factor η may be determined by the expression:

$$\eta = \sqrt{10/(5+\xi)} \geq 0{,}55 \tag{3.6}$$

where ξ is the viscous damping ratio of the structure, expressed as a percentage.

(4) If for special cases a viscous damping ratio different from 5% is to be used, this value is given in the relevant Part of EN 1998.

(5)P The elastic displacement response spectrum, $S_{De}(T)$, shall be obtained by direct transformation of the elastic acceleration response spectrum, $S_e(T)$, using the following expression:

$$S_{De}(T) = S_e(T)\left[\frac{T}{2\pi}\right]^2 \tag{3.7}$$

(6) Expression (3.7) should normally be applied for vibration periods not exceeding 4,0 s. For structures with vibration periods longer than 4,0 s, a more complete definition of the elastic displacement spectrum is possible.

NOTE For the Type 1 elastic response spectrum referred to in Note 1 to **3.2.2.2(2)**P, such a definition is presented in Informative Annex A in terms of the displacement response spectrum. For periods longer than 4,0 s, the elastic acceleration response spectrum may be derived from the elastic displacement response spectrum by inverting expression (3.7).

3.2.2.3 Vertical elastic response spectrum

(1)P The vertical component of the seismic action shall be represented by an elastic response spectrum, $S_{ve}(T)$, derived using expressions (3.8)-(3.11).

$$0 \leq T \leq T_B : S_{ve}(T) = a_{vg} \cdot \left[1 + \frac{T}{T_B} \cdot (\eta \cdot 3{,}0 - 1)\right] \tag{3.8}$$

$$T_B \leq T \leq T_C : S_{ve}(T) = a_{vg} \cdot \eta \cdot 3{,}0 \tag{3.9}$$

$$T_C \leq T \leq T_D : S_{ve}(T) = a_{vg} \cdot \eta \cdot 3{,}0\left[\frac{T_C}{T}\right] \tag{3.10}$$

$$T_D \leq T \leq 4\text{s} : S_{ve}(T) = a_{vg} \cdot \eta \cdot 3{,}0\left[\frac{T_C . T_D}{T^2}\right] \tag{3.11}$$

NOTE The values to be ascribed to T_B, T_C, T_D and a_{vg} for each type (shape) of vertical spectrum to be used in a country may be found in its National Annex. The recommended choice is the use of two types of vertical spectra: Type 1 and Type 2. As for the spectra defining the horizontal components of the seismic action, if the earthquakes that contribute most to the seismic hazard defined for the site for the purpose of probabilistic hazard assessment have a surface-wave

Sofort-Download-Beuth-Book Supply Bureau-KdNr.7066075-ID.SCBLGSA1OBPULJD3QN0TD2AJ.1-2016-08-02 13:22:06

SUPPLIED BY BSB EDGE UNDER LICENCE FROM DIN FOR RAJARAMBAPU INSTITUTE OF TECHNOLOGY - SANGLI DIST. VIDE BSB EDGE ORDER REGISTRATION NO. ORD01-1088 ON 02/08/2016

magnitude, M_s, not greater than 5,5, it is recommended that the Type 2 spectrum is adopted. For the five ground types A, B, C, D and E the recommended values of the parameters describing the vertical spectra are given in Table 3.4. These recommended values do not apply for special ground types S_1 and S_2.

Table 3.4: Recommended values of parameters describing the vertical elastic response spectra

Spectrum	a_{vg}/a_g	T_B (s)	T_C (s)	T_D (s)
Type 1	0,90	0,05	0,15	1,0
Type 2	0,45	0,05	0,15	1,0

3.2.2.4 Design ground displacement

(1) Unless special studies based on the available information indicate otherwise, the design ground displacement d_g, corresponding to the design ground acceleration, may be estimated by means of the following expression:

$$d_g = 0{,}025 \cdot a_g \cdot S \cdot T_C \cdot T_D \tag{3.12}$$

with a_g, S, T_C and T_D as defined in **3.2.2.2**.

3.2.2.5 Design spectrum for elastic analysis

(1) The capacity of structural systems to resist seismic actions in the non-linear range generally permits their design for resistance to seismic forces smaller than those corresponding to a linear elastic response.

(2) To avoid explicit inelastic structural analysis in design, the capacity of the structure to dissipate energy, through mainly ductile behaviour of its elements and/or other mechanisms, is taken into account by performing an elastic analysis based on a response spectrum reduced with respect to the elastic one, henceforth called a "design spectrum". This reduction is accomplished by introducing the behaviour factor q.

(3)P The behaviour factor q is an approximation of the ratio of the seismic forces that the structure would experience if its response was completely elastic with 5% viscous damping, to the seismic forces that may be used in the design, with a conventional elastic analysis model, still ensuring a satisfactory response of the structure. The values of the behaviour factor q, which also account for the influence of the viscous damping being different from 5%, are given for various materials and structural systems according to the relevant ductility classes in the various Parts of EN 1998. The value of the behaviour factor q may be different in different horizontal directions of the structure, although the ductility classification shall be the same in all directions.

(4)P For the horizontal components of the seismic action the design spectrum, $S_d(T)$, shall be defined by the following expressions:

$$0 \le T \le T_B : S_d(T) = a_g \cdot S \cdot \left[\frac{2}{3} + \frac{T}{T_B} \cdot \left(\frac{2{,}5}{q} - \frac{2}{3}\right)\right] \tag{3.13}$$

Sofort-Download-Beuth-Book Supply Bureau-KdNr.7066075-ID.SCBLGSA1OBPULJD3QN0TD2AJ.1-2016-08-02 13:22:06

SUPPLIED BY BSB EDGE UNDER LICENCE FROM DIN FOR RAJARAMBAPU INSTITUTE OF TECHNOLOGY - SANGLI DIST. VIDE BSB EDGE ORDER REGISTRATION NO. ORD01-1088 ON 02/08/2016

$$T_B \le T \le T_C : \quad S_d(T) = a_g \cdot S \cdot \frac{2,5}{q} \tag{3.14}$$

$$T_C \le T \le T_D : \; S_d(T) \begin{cases} = a_g \cdot S \cdot \frac{2,5}{q} \cdot \left[\frac{T_C}{T}\right] \\ \ge \beta \cdot a_g \end{cases} \tag{3.15}$$

$$T_D \le T : \quad S_d(T) \begin{cases} = a_g \cdot S \cdot \frac{2,5}{q} \cdot \left[\frac{T_C T_D}{T^2}\right] \\ \ge \beta \cdot a_g \end{cases} \tag{3.16}$$

where

a_g, S, T_C and T_D	are as defined in **3.2.2.2**;
$S_d(T)$	is the design spectrum;
q	is the behaviour factor;
β	is the lower bound factor for the horizontal design spectrum.

NOTE The value to be ascribed to β for use in a country can be found in its National Annex. The recommended value for β is 0,2.

(5) For the vertical component of the seismic action the design spectrum is given by expressions (3.13) to (3.16), with the design ground acceleration in the vertical direction, a_{vg} replacing a_g, S taken as being equal to 1,0 and the other parameters as defined in **3.2.2.3**.

(6) For the vertical component of the seismic action a behaviour factor q up to to 1,5 should generally be adopted for all materials and structural systems.

(7) The adoption of values for q greater than 1,5 in the vertical direction should be justified through an appropriate analysis.

(8)P The design spectrum as defined above is not sufficient for the design of structures with base-isolation or energy-dissipation systems.

3.2.3 Alternative representations of the seismic action

3.2.3.1 Time - history representation

3.2.3.1.1 General

(1)P The seismic motion may also be represented in terms of ground acceleration time-histories and related quantities (velocity and displacement).

(2)P When a spatial model of the structure is required, the seismic motion shall consist of three simultaneously acting accelerograms. The same accelerogram may not be used simultaneously along both horizontal directions. Simplifications are possible in accordance with the relevant Parts of EN 1998.

Sofort-Download-Beuth-Book Supply Bureau-KdNr.7066075-ID.SCBLGSA1OBPULJD3QN0TD2AJ.1-2016-08-02 13:22:06

SUPPLIED BY BSB EDGE UNDER LICENCE FROM DIN FOR RAJARAMBAPU INSTITUTE OF TECHNOLOGY - SANGLI DIST. VIDE BSB EDGE ORDER REGISTRATION NO. ORD01-1088 ON 02/08/2016

(3) Depending on the nature of the application and on the information actually available, the description of the seismic motion may be made by using artificial accelerograms (see **3.2.3.1.2**) and recorded or simulated accelerograms (see **3.2.3.1.3**).

3.2.3.1.2 Artificial accelerograms

(1)P Artificial accelerograms shall be generated so as to match the elastic response spectra given in **3.2.2.2** and **3.2.2.3** for 5% viscous damping ($\xi = 5\%$).

(2)P The duration of the accelerograms shall be consistent with the magnitude and the other relevant features of the seismic event underlying the establishment of a_g.

(3) When site-specific data are not available, the minimum duration T_s of the stationary part of the accelerograms should be equal to 10 s.

(4) The suite of artificial accelerograms should observe the following rules:

a) a minimum of 3 accelerograms should be used;

b) the mean of the zero period spectral response acceleration values (calculated from the individual time histories) should not be smaller than the value of $a_g.S$ for the site in question.

c) in the range of periods between $0{,}2T_1$ and $2T_1$, where T_1 is the fundamental period of the structure in the direction where the accelerogram will be applied; no value of the mean 5% damping elastic spectrum, calculated from all time histories, should be less than 90% of the corresponding value of the 5% damping elastic response spectrum.

3.2.3.1.3 Recorded or simulated accelerograms

(1)P Recorded accelerograms, or accelerograms generated ▌AC⟩ through a numerical simulation ⟨AC▌ of source and travel path mechanisms, may be used, provided that the samples used are adequately qualified with regard to the seismogenetic features of the sources and to the soil conditions appropriate to the site, and their values are scaled to the value of $a_g.S$ for the zone under consideration.

(2)P For soil amplification analyses and for dynamic slope stability verifications see EN 1998-5:2004, **2.2**.

(3) The suite of recorded or simulated accelerograms to be used should satisfy **3.2.3.1.2(4)**.

3.2.3.2 Spatial model of the seismic action

(1)P For structures with special characteristics such that the assumption of the same excitation at all support points cannot reasonably be made, spatial models of the seismic action shall be used (see **3.2.2.1(8)**).

(2)P Such spatial models shall be consistent with the elastic response spectra used for the basic definition of the seismic action in accordance with **3.2.2.2** and **3.2.2.3**.

Sofort-Download-Beuth-Book Supply Bureau-KdNr.7066075-ID.SCBLGSA1OBPULJD3QN0TD2AJ.1-2016-08-02 13:22:06

SUPPLIED BY BSB EDGE UNDER LICENCE FROM DIN FOR RAJARAMBAPU INSTITUTE OF TECHNOLOGY - SANGLI DIST. VIDE BSB EDGE ORDER REGISTRATION NO. ORD01-1088 ON 02/08/2016

3.2.4 Combinations of the seismic action with other actions

(1)P The design value E_d of the effects of actions in the seismic design situation shall be determined in accordance with EN 1990:2002, **6.4.3.4**.

(2)P The inertial effects of the design seismic action shall be evaluated by taking into account the presence of the masses associated with all gravity loads appearing in the following combination of actions:

$$\Sigma G_{k,j} \text{ "+" } \Sigma \psi_{E,i} \cdot Q_{k,i} \tag{3.17}$$

where

$\psi_{E,i}$ is the combination coefficient for variable action *i* (see **4.2.4**).

(3) The combination coefficients $\psi_{E,i}$ take into account the likelihood of the loads $Q_{k,i}$ not being present over the entire structure during the earthquake. These coefficients may also account for a reduced participation of masses in the motion of the structure due to the non-rigid connection between them.

(4) Values of $\psi_{2,i}$ are given in EN 1990:2002 and values of $\psi_{E,i}$ for buildings or other types of structures are given in the relevant parts of EN 1998.

Sofort-Download-Beuth-Book Supply Bureau-KdNr.7066075-ID.SCBLGSA1OBPULJD3QN0TD2AJ.1-2016-08-02 13:22:06

SUPPLIED BY BSB EDGE UNDER LICENCE FROM DIN FOR RAJARAMBAPU INSTITUTE OF TECHNOLOGY - SANGLI DIST. VIDE BSB EDGE ORDER REGISTRATION NO. ORD01-1088 ON 02/08/2016

SUPPLIED BY BSB EDGE UNDER LICENCE FROM DIN FOR RAJARAMBAPU INSTITUTE OF TECHNOLOGY - SANGLI DIST. VIDE BSB EDGE ORDER REGISTRATION NO. ORD01-1088 ON 02/08/2016

Sofort-Download-Beuth-Book Supply Bureau-KdNr.7066075-ID.SCBLGSA1OBPULJD3QN0TD2AJ.1-2016-08-02 13:22:06

4 DESIGN OF BUILDINGS

4.1 General

4.1.1 Scope

(1)P Section **4** contains general rules for the earthquake-resistant design of buildings and shall be used in conjunction with Sections **2**, **3** and **5** to **9**.

(2) Sections **5** to **9** are concerned with specific rules for various materials and elements used in buildings.

(3) Guidance on base-isolated buildings is given in Section **10**.

4.2 Characteristics of earthquake resistant buildings

4.2.1 Basic principles of conceptual design

(1)P In seismic regions the aspect of seismic hazard shall be taken into account in the early stages of the conceptual design of a building, thus enabling the achievement of a structural system which, within acceptable costs, satisfies the fundamental requirements specified in **2.1**.

(2) The guiding principles governing this conceptual design are:

- structural simplicity;
- uniformity, symmetry and redundancy;
- bi-directional resistance and stiffness;
- torsional resistance and stiffness;
- diaphragmatic behaviour at storey level;
- adequate foundation.

These principles are further elaborated in the following subclauses.

4.2.1.1 Structural simplicity

(1) Structural simplicity, characterised by the existence of clear and direct paths for the transmission of the seismic forces, is an important objective to be pursued, since the modelling, analysis, dimensioning, detailing and construction of simple structures are subject to much less uncertainty and thus the prediction of its seismic behaviour is much more reliable.

4.2.1.2 Uniformity, symmetry and redundancy

(1) Uniformity in plan is characterised by an even distribution of the structural elements which allows short and direct transmission of the inertia forces created in the distributed masses of the building. If necessary, uniformity may be realised by subdividing the entire building by seismic joints into dynamically independent units,

provided that these joints are designed against pounding of the individual units in accordance with **4.4.2.7**.

(2) Uniformity in the development of the structure along the height of the building is also important, since it tends to eliminate the occurrence of sensitive zones where concentrations of stress or large ductility demands might prematurely cause collapse.

(3) A close relationship between the distribution of masses and the distribution of resistance and stiffness eliminates large eccentricities between mass and stiffness.

(4) If the building configuration is symmetrical or quasi-symmetrical, a symmetrical layout of structural elements, which should be well-distributed in-plan, is appropriate for the achievement of uniformity.

(5) The use of evenly distributed structural elements increases redundancy and allows a more favourable redistribution of action effects and widespread energy dissipation across the entire structure.

4.2.1.3 Bi-directional resistance and stiffness

(1)P Horizontal seismic motion is a bi-directional phenomenon and thus the building structure shall be able to resist horizontal actions in any direction.

(2) To satisfy **(1)**P, the structural elements should be arranged in an orthogonal in-plan structural pattern, ensuring similar resistance and stiffness characteristics in both main directions.

(3) The choice of the stiffness characteristics of the structure, while attempting to minimise the effects of the seismic action (taking into account its specific features at the site) should also limit the development of excessive displacements that might lead to either instabilities due to second order effects or excessive damages.

4.2.1.4 Torsional resistance and stiffness

(1) Besides lateral resistance and stiffness, building structures should possess adequate torsional resistance and stiffness in order to limit the development of torsional motions which tend to stress the different structural elements in a non-uniform way . In this respect, arrangements in which the main elements resisting the seismic action are distributed close to the periphery of the building present clear advantages.

4.2.1.5 Diaphragmatic behaviour at storey level

(1) In buildings, floors (including the roof) play a very important role in the overall seismic behaviour of the structure. They act as horizontal diaphragms that collect and transmit the inertia forces to the vertical structural systems and ensure that those systems act together in resisting the horizontal seismic action. The action of floors as diaphragms is especially relevant in cases of complex and non-uniform layouts of the vertical structural systems, or where systems with different horizontal deformability characteristics are used together (e.g. in dual or mixed systems).

(2) Floor systems and the roof should be provided with in-plane stiffness and resistance and with effective connection to the vertical structural systems. Particular

Sofort-Download-Beuth-Book Supply Bureau-KdNr.7066075-ID.SCBLGSA1OBPULJD3QN0TD2AJ.1-2016-08-02 13:22:06

SUPPLIED BY BSB EDGE UNDER LICENCE FROM DIN FOR RAJARAMBAPU INSTITUTE OF TECHNOLOGY - SANGLI DIST. VIDE BSB EDGE ORDER REGISTRATION NO. ORD01-1088 ON 02/08/2016

care should be taken in cases of non-compact or very elongated in-plan shapes and in cases of large floor openings, especially if the latter are located in the vicinity of the main vertical structural elements, thus hindering such effective connection between the vertical and horizontal structure.

(3) Diaphragms should have sufficient in-plane stiffness for the distribution of horizontal inertia forces to the vertical structural systems in accordance with the assumptions of the analysis (e.g. rigidity of the diaphragm, see **4.3.1(4)**), particularly when there are significant changes in stiffness or offsets of vertical elements above and below the diaphragm.

4.2.1.6 Adequate foundation

(1)P With regard to the seismic action, the design and construction of the foundations and of the connection to the superstructure shall ensure that the whole building is subjected to a uniform seismic excitation.

(2) For structures composed of a discrete number of structural walls, likely to differ in width and stiffness, a rigid, box-type or cellular foundation, containing a foundation slab and a cover slab should generally be chosen.

(3) For buildings with individual foundation elements (footings or piles), the use of a foundation slab or tie-beams between these elements in both main directions is recommended, subject to the criteria and rules of EN 1998-5:2004, **5.4.1.2**.

4.2.2 Primary and secondary seismic members

(1)P A certain number of structural members (e.g. beams and/or columns) may be designated as “secondary” seismic members (or elements), not forming part of the seismic action resisting system of the building. The strength and stiffness of these elements against seismic actions shall be neglected. They do not need to conform to the requirements of Sections **5** to **9**. Nonetheless these members and their connections shall be designed and detailed to maintain support of gravity loading when subjected to the displacements caused by the most unfavourable seismic design condition. Due allowance of 2nd order effects (P-Δ effects) should be made in the design of these members.

(2) Sections **5** to **9** give rules, in addition to those of EN 1992, EN 1993, EN 1994, EN 1995 and EN 1996, for the design and detailing of secondary seismic elements.

(3) All structural members not designated as being secondary seismic members are taken as being primary seismic members. They are taken as being part of the lateral force resisting system, should be modelled in the structural analysis in accordance with **4.3.1** and designed and detailed for earthquake resistance in accordance with the rules of Sections **5** to **9**.

(4) The total contribution to lateral stiffness of all secondary seismic members should not exceed 15% of that of all primary seismic members.

Sofort-Download-Beuth-Book Supply Bureau-KdNr.7066075-ID.SCBLGSA1OBPULJD3QN0TD2AJ.1-2016-08-02 13:22:06

SUPPLIED BY BSB EDGE UNDER LICENCE FROM DIN FOR RAJARAMBAPU INSTITUTE OF TECHNOLOGY - SANGLI DIST. VIDE BSB EDGE ORDER REGISTRATION NO. ORD01-1088 ON 02/08/2016

(5) The designation of some structural elements as secondary seismic members is not allowed to change the classification of the structure from non-regular to regular as described in **4.2.3**.

4.2.3 Criteria for structural regularity

4.2.3.1 General

(1)P For the purpose of seismic design, building structures are categorised into being regular or non-regular.

NOTE In building structures consisting of more than one dynamically independent units, the categorisation and the relevant criteria in **4.2.3** refer to the individual dynamically independent units. In such structures, "individual dynamically independent unit" is meant for "building" in **4.2.3.**

(2) This distinction has implications for the following aspects of the seismic design:

- the structural model, which can be either a simplified planar model or a spatial model ;
- the method of analysis, which can be either a simplified response spectrum analysis (lateral force procedure) or a modal one;
- the value of the behaviour factor q, which shall be decreased for buildings non-regular in elevation (see **4.2.3.3**).

(3)P With regard to the implications of structural regularity on analysis and design, separate consideration is given to the regularity characteristics of the building in plan and in elevation (Table 4.1).

Table 4.1: Consequences of structural regularity on seismic analysis and design

Regularity		Allowed Simplification		Behaviour factor
Plan	Elevation	Model	Linear-elastic Analysis	(for linear analysis)
Yes	Yes	Planar	Lateral force[a]	Reference value
Yes	No	Planar	Modal	Decreased value
No	Yes	Spatial[b]	Lateral force[a]	Reference value
No	No	Spatial	Modal	Decreased value

[a] If the condition of **4.3.3.2.1(2)**a) is also met.
[b] Under the specific conditions given in **4.3.3.1(8)** a separate planar model may be used in each horizontal direction, in accordance with **4.3.3.1(8)**.

(4) Criteria describing regularity in plan and in elevation are given in **4.2.3.2** and **4.2.3.3.** Rules concerning modelling and analysis are given in **4.3**.

(5)P The regularity criteria given in **4.2.3.2** and **4.2.3.3** should be taken as necessary conditions. It shall be verified that the assumed regularity of the building structure is not impaired by other characteristics, not included in these criteria.

(6) The reference values of the behaviour factors are given in Sections **5** to **9**.

Sofort-Download-Beuth-Book Supply Bureau-KdNr.7066075-ID.SCBLGSA1OBPULJD3QN0TD2AJ.1-2016-08-02 13:22:06

SUPPLIED BY BSB EDGE UNDER LICENCE FROM DIN FOR RAJARAMBAPU INSTITUTE OF TECHNOLOGY - SANGLI DIST. VIDE BSB EDGE ORDER REGISTRATION NO. ORD01-1088 ON 02/08/2016

(7) For non-regular in elevation buildings the decreased values of the behaviour factor are given by the reference values multiplied by 0,8.

4.2.3.2 Criteria for regularity in plan

(1)P For a building to be categorised as being regular in plan, it shall satisfy all the conditions listed in the following paragraphs.

(2) With respect to the lateral stiffness and mass distribution, the building structure shall be approximately symmetrical in plan with respect to two orthogonal axes.

(3) The plan configuration shall be compact, i.e., each floor shall be delimited by a polygonal convex line. If in plan set-backs (re-entrant corners or edge recesses) exist, regularity in plan may still be considered as being satisfied, provided that these set-backs do not affect the floor in-plan stiffness and that, for each set-back, the area between the outline of the floor and a convex polygonal line enveloping the floor does not exceed 5 % of the floor area.

(4) The in-plan stiffness of the floors shall be sufficiently large in comparison with the lateral stiffness of the vertical structural elements, so that the deformation of the floor shall have a small effect on the distribution of the forces among the vertical structural elements. In this respect, the L, C, H, I, and X plan shapes should be carefully examined, notably as concerns the stiffness of the lateral branches, which should be comparable to that of the central part, in order to satisfy the rigid diaphragm condition. The application of this paragraph should be considered for the global behaviour of the building.

(5) The slenderness $\lambda = L_{max}/L_{min}$ of the building in plan shall be not higher than 4, where L_{max} and L_{min} are respectively the larger and smaller in plan dimension of the building, measured in orthogonal directions.

(6) At each level and for each direction of analysis x and y, the structural eccentricity e_o and the torsional radius r shall be in accordance with the two conditions below, which are expressed for the direction of analysis y:

$$e_{ox} \leq 0{,}30 \cdot r_x \tag{4.1a}$$

$$r_x \geq l_s \tag{4.1b}$$

where

e_{ox} is the distance between the centre of stiffness and the centre of mass, measured along the x direction, which is normal to the direction of analysis considered;

r_x is the square root of the ratio of the torsional stiffness to the lateral stiffness in the y direction ("torsional radius"); and

l_s is the radius of gyration of the floor mass in plan (square root of the ratio of (a) the polar moment of inertia of the floor mass in plan with respect to the centre of mass of the floor to (b) the floor mass).

Sofort-Download-Beuth-Book Supply Bureau-KdNr.7066075-ID.SCBLGSA1OBPULJD3QN0TD2AJ.1-2016-08-02 13:22:06

SUPPLIED BY BSB EDGE UNDER LICENCE FROM DIN FOR RAJARAMBAPU INSTITUTE OF TECHNOLOGY - SANGLI DIST. VIDE BSB EDGE ORDER REGISTRATION NO. ORD01-1088 ON 02/08/2016

The definitions of centre of stiffness and torsional radius *r* are provided in **(7)** to **(9)** of this subclause .

(7) In single storey buildings the centre of stiffness is defined as the centre of the lateral stiffness of all primary seismic members. The torsional radius *r* is defined as the square root of the ratio of the global torsional stiffness with respect to the centre of lateral stiffness, and the global lateral stiffness, in one direction, taking into account all of the primary seismic members in this direction.

(8) In multi-storey buildings only approximate definitions of the centre of stiffness and of the torsional radius are possible. A simplified definition, for the classification of structural regularity in plan and for the approximate analysis of torsional effects, is possible if the following two conditions are satisfied:

a) all lateral load resisting systems, such as cores, structural walls, or frames, run without interruption from the foundations to the top of the building;

b) the deflected shapes of the individual systems under horizontal loads are not very different. This condition may be considered satisfied in the case of frame systems and wall systems. In general, this condition is not satisfied in dual systems.

NOTE The National Annex can include reference to documents that might provide definitions of the centre of stiffness and of the torsional radius in multi-storey buildings, both for those that meet the conditions (a) and (b) of paragraph **(8)**, and for those that do not.

(9) In frames and in systems of slender walls with prevailing flexural deformations, the position of the centres of stiffness and the torsional radius of all storeys may be calculated as those of the moments of inertia of the cross-sections of the vertical elements. If, in addition to flexural deformations, shear deformations are also significant, they may be accounted for by using an equivalent moment of inertia of the cross-section.

4.2.3.3 Criteria for regularity in elevation

(1)P For a building to be categorised as being regular in elevation, it shall satisfy all the conditions listed in the following paragraphs.

(2) All lateral load resisting systems, such as cores, structural walls, or frames, shall run without interruption from their foundations to the top of the building or, if setbacks at different heights are present, to the top of the relevant zone of the building.

(3) Both the lateral stiffness and the mass of the individual storeys shall remain constant or reduce gradually, without abrupt changes, from the base to the top of a particular building.

(4) In framed buildings the ratio of the actual storey resistance to the resistance required by the analysis should not vary disproportionately between adjacent storeys. Within this context the special aspects of masonry infilled frames are treated in **4.3.6.3.2**.

(5) When setbacks are present, the following additional conditions apply:

Sofort-Download-Beuth-Book Supply Bureau-KdNr.7066075-ID.SCBLGSA1OBPULJD3QN0TD2AJ.1-2016-08-02 13:22:06

SUPPLIED BY BSB EDGE UNDER LICENCE FROM DIN FOR RAJARAMBAPU INSTITUTE OF TECHNOLOGY - SANGLI DIST. VIDE BSB EDGE ORDER REGISTRATION NO. ORD01-1088 ON 02/08/2016

a) for gradual setbacks preserving axial symmetry, the setback at any floor shall be not greater than 20 % of the previous plan dimension in the direction of the setback (see Figure 4.1.a and Figure 4.1.b);

b) for a single setback within the lower 15 % of the total height of the main structural system, the setback shall be not greater than 50 % of the previous plan dimension (see Figure 4.1.c). In this case the structure of the base zone within the vertically projected perimeter of the upper storeys should be designed to resist at least 75% of the horizontal shear forces that would develop in that zone in a similar building without the base enlargement;

c) if the setbacks do not preserve symmetry, in each face the sum of the setbacks at all storeys shall be not greater than 30 % of the plan dimension at the ground floor above the foundation or above the top of a rigid basement, and the individual setbacks shall be not greater than 10 % of the previous plan dimension (see Figure 4.1.d).

(a)

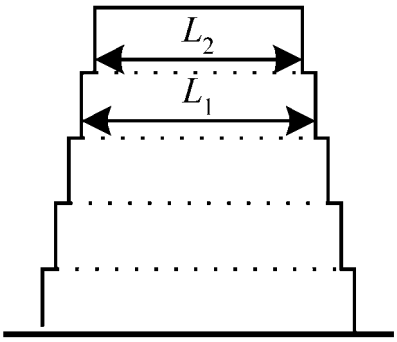

Criterion for (a): $\frac{L_1 - L_2}{L_1} \leq 0{,}20$

(b) (setback occurs above 0,15H)

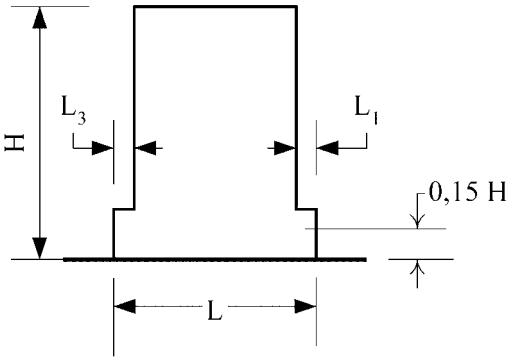

Criterion for (b): $\frac{L_3 + L_1}{L} \leq 0{,}20$

(c) (setback occurs below 0,15H)

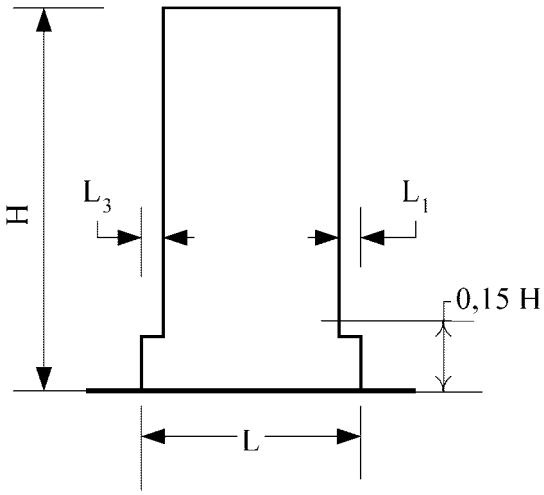

Criterion for (c): $\frac{L_3 + L_1}{L} \leq 0{,}50$

d)

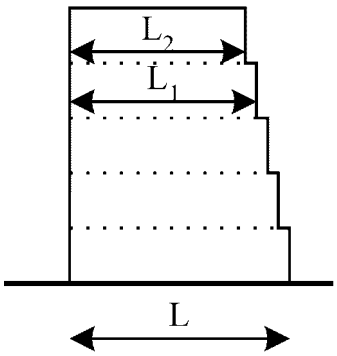

Criteria for (d): $\frac{L - L_2}{L} \leq 0{,}30$

$\frac{L_1 - L_2}{L_1} \leq 0{,}10$

Figure 4.1: Criteria for regularity of buildings with setbacks

Sofort-Download-Beuth-Book Supply Bureau-KdNr.7066075-ID.SCBLGSA1OBPULJD3QN0TD2AJ.1-2016-08-02 13:22:06

SUPPLIED BY BSB EDGE UNDER LICENCE FROM DIN FOR RAJARAMBAPU INSTITUTE OF TECHNOLOGY - SANGLI DIST. VIDE BSB EDGE ORDER REGISTRATION NO. ORD01-1088 ON 02/08/2016

4.2.4 Combination coefficients for variable actions

(1)P The combination coefficients ψ_{2i} (for the quasi-permanent value of variable action q_i) for the design of buildings (see **3.2.4**) shall be those given in EN 1990:2002, Annex A1.

(2)P The combination coefficients ψ_{Ei} introduced in **3.2.4(2)**P for the calculation of the effects of the seismic actions shall be computed from the following expression:

$$\psi_{Ei} = \varphi \cdot \psi_{2i} \tag{4.2}$$

NOTE The values to be ascribed to φ for use in a country may be found in its National Annex. The recommended values for φ are listed in Table 4.2.

Table 4.2: Values of φ for calculating ψ_{Ei}

Type of variable action	Storey	φ
Categories A-C*	Roof	1,0
	Storeys with correlated occupancies	0,8
	Independently occupied storeys	0,5
Categories D-F* and Archives		1,0

* Categories as defined in EN 1991-1-1:2002.

4.2.5 Importance classes and importance factors

(1)P Buildings are classified in 4 importance classes, depending on the consequences of collapse for human life, on their importance for public safety and civil protection in the immediate post-earthquake period, and on the social and economic consequences of collapse.

(2)P The importance classes are characterised by different importance factors γ_I as described in **2.1(3)**.

(3) The importance factor γ_I = 1,0 is associated with a seismic event having the reference return period indicated in **3.2.1(3)**.

(4) The definitions of the importance classes are given in Table 4.3.

Sofort-Download-Beuth-Book Supply Bureau-KdNr.7066075-ID.SCBLGSA1OBPULJD3QN0TD2AJ.1-2016-08-02 13:22:06

SUPPLIED BY BSB EDGE UNDER LICENCE FROM DIN FOR RAJARAMBAPU INSTITUTE OF TECHNOLOGY - SANGLI DIST. VIDE BSB EDGE ORDER REGISTRATION NO. ORD01-1088 ON 02/08/2016

SUPPLIED BY BSB EDGE UNDER LICENCE FROM DIN FOR RAJARAMBAPU INSTITUTE OF TECHNOLOGY - SANGLI DIST. VIDE BSB EDGE ORDER REGISTRATION NO. ORD01-1088 ON 02/08/2016

Table 4.3 Importance classes for buildings

Importance class	Buildings
I	Buildings of minor importance for public safety, e.g. agricultural buildings, etc.
II	Ordinary buildings, not belonging in the other categories.
III	Buildings whose seismic resistance is of importance in view of the consequences associated with a collapse, e.g. schools, assembly halls, cultural institutions etc.
IV	Buildings whose integrity during earthquakes is of vital importance for civil protection, e.g. hospitals, fire stations, power plants, etc.

NOTE Importance classes I, II and III or IV correspond roughly to consequences classes CC1, CC2 and CC3, respectively, defined in EN 1990:2002, Annex B.

(5)P The value of γ_I for importance class II shall be, by definition, equal to 1,0.

NOTE The values to be ascribed to γ_I for use in a country may be found in its National Annex. The values of γ_I may be different for the various seismic zones of the country, depending on the seismic hazard conditions and on public safety considerations (see Note to **2.1(4)**). The recommended values of γ_I for importance classes I, III and IV are equal to 0,8, 1,2 and 1,4, respectively.

(6) For buildings which house dangerous installations or materials the importance factor should be established in accordance with the criteria set forth in EN 1998-4.

4.3 Structural analysis

4.3.1 Modelling

(1)P The model of the building shall adequately represent the distribution of stiffness and mass in it so that all significant deformation shapes and inertia forces are properly accounted for under the seismic action considered. In the case of non-linear analysis, the model shall also adequately represent the distribution of strength.

(2) The model should also account for the contribution of joint regions to the deformability of the building, e.g. the end zones in beams or columns of frame type structures. Non-structural elements, which may influence the response of the primary seismic structure, should also be accounted for.

(3) In general the structure may be considered to consist of a number of vertical and lateral load resisting systems, connected by horizontal diaphragms.

(4) When the floor diaphragms of the building may be taken as being rigid in their planes, the masses and the moments of inertia of each floor may be lumped at the centre of gravity.

NOTE The diaphragm is taken as being rigid, if, when it is modelled with its actual in-plane flexibility, its horizontal displacements nowhere exceed those resulting from the rigid diaphragm assumption by more than 10% of the corresponding absolute horizontal displacements in the seismic design situation.

Sofort-Download-Beuth-Book Supply Bureau-KdNr.7066075-ID.SCBLGSA1OBPULJD3QN0TD2AJ.1-2016-08-02 13:22:06

(5) For buildings conforming to the criteria for regularity in plan (see **4.2.3.2**) or with the conditions presented in **4.3.3.1(8)**, the analysis may be performed using two planar models, one for each main direction.

(6) In concrete buildings, in composite steel-concrete buildings and in masonry buildings the stiffness of the load bearing elements should, in general, be evaluated taking into account the effect of cracking. Such stiffness should correspond to the initiation of yielding of the reinforcement.

(7) Unless a more accurate analysis of the cracked elements is performed, the elastic flexural and shear stiffness properties of concrete and masonry elements may be taken to be equal to one-half of the corresponding stiffness of the uncracked elements.

(8) Infill walls which contribute significantly to the lateral stiffness and resistance of the building should be taken into account. See **4.3.6** for masonry infills of concrete, steel or composite frames.

(9)P The deformability of the foundation shall be taken into account in the model, whenever it may have an adverse overall influence on the structural response.

NOTE Foundation deformability (including the soil-structure interaction) may always be taken into account, including the cases in which it has beneficial effects.

(10)P The masses shall be calculated from the gravity loads appearing in the combination of actions indicated in **3.2.4**. The combination coefficients ψ_{Ei} are given in **4.2.4(2)**P.

4.3.2 Accidental torsional effects

(1)P In order to account for uncertainties in the location of masses and in the spatial variation of the seismic motion, the calculated centre of mass at each floor *i* shall be considered as being displaced from its nominal location in each direction by an accidental eccentricity:

$$e_{ai} = \pm 0{,}05 \cdot L_i \tag{4.3}$$

where

e_{ai} is the accidental eccentricity of storey mass *i* from its nominal location, applied in the same direction at all floors;

L_i is the floor-dimension perpendicular to the direction of the seismic action.

4.3.3 Methods of analysis

4.3.3.1 General

(1) Within the scope of Section **4**, the seismic effects and the effects of the other actions included in the seismic design situation may be determined on the basis of the linear-elastic behaviour of the structure.

Sofort-Download-Beuth-Book Supply Bureau-KdNr.7066075-ID.SCBLGSA1OBPULJD3QN0TD2AJ.1-2016-08-02 13:22:06

SUPPLIED BY BSB EDGE UNDER LICENCE FROM DIN FOR RAJARAMBAPU INSTITUTE OF TECHNOLOGY - SANGLI DIST. VIDE BSB EDGE ORDER REGISTRATION NO. ORD01-1088 ON 02/08/2016

(2)P The reference method for determining the seismic effects shall be the modal response spectrum analysis, using a linear-elastic model of the structure and the design spectrum given in **3.2.2.5**.

(3) Depending on the structural characteristics of the building one of the following two types of linear-elastic analysis may be used:

a) the “lateral force method of analysis” for buildings meeting the conditions given in **4.3.3.2**;

b) the “modal response spectrum analysis", which is applicable to all types of buildings (see **4.3.3.3**).

(4) As an alternative to a linear method, a non-linear method may also be used, such as:

c) non-linear static (pushover) analysis;

d) non-linear time history (dynamic) analysis,

provided that the conditions specified in **(5)** and **(6)** of this subclause and in **4.3.3.4** are satisfied.

NOTE For base isolated buildings the conditions under which the linear methods a) and b) or the nonlinear ones c) and d), may be used are given in Section **10**. For non-base-isolated buildings, the linear methods of **4.3.3.1(3)** may always be used, as specified in **4.3.3.2.1**. The choice of whether the nonlinear methods of **4.3.3.1(4)** may also be applied to non-base-isolated buildings in a particular country , will be found in its National Annex. The National Annex may also include reference to complementary information about member deformation capacities and the associated partial factors to be used in the Ultimate Limit State verifications in accordance with **4.4.2.2(5)**.

(5) Non-linear analyses should be properly substantiated with respect to the seismic input, the constitutive model used, the method of interpreting the results of the analysis and the requirements to be met.

(6) Non-base-isolated structures designed on the basis of non-linear pushover analysis without using the behaviour factor q (see **4.3.3.4.2.1(1)**d), should satisfy **4.4.2.2(5)**, as well as the rules of Sections **5** to **9** for dissipative structures.

(7) Linear-elastic analysis may be performed using two planar models, one for each main horizontal direction, if the criteria for regularity in plan are satisfied (see **4.2.3.2**).

(8) Depending on the importance class of the building, linear-elastic analysis may be performed using two planar models, one for each main horizontal direction, even if the criteria for regularity in plan in **4.2.3.2** are not satisfied, provided that all of the following special regularity conditions are met:

a) the building shall have well-distributed and relatively rigid cladding and partitions;

b) the building height shall not exceed 10 m;

Sofort-Download-Beuth-Book Supply Bureau-KdNr.7066075-ID.SCBLGSA1OBPULJD3QN0TD2AJ.1-2016-08-02 13:22:06

SUPPLIED BY BSB EDGE UNDER LICENCE FROM DIN FOR RAJARAMBAPU INSTITUTE OF TECHNOLOGY - SANGLI DIST. VIDE BSB EDGE ORDER REGISTRATION NO. ORD01-1088 ON 02/08/2016

c) the in-plane stiffness of the floors shall be large enough in comparison with the lateral stiffness of the vertical structural elements, so that a rigid diaphragm behaviour may be assumed.

d) the centres of lateral stiffness and mass shall be each approximately on a vertical line and, in the two horizontal directions of analysis, satisfy the conditions: $r_x^2 > l_s^2 + e_{ox}^2$, $r_y^2 > l_s^2 + e_{oy}^2$, where the radius of gyration l_s, the torsional radii r_x and r_y and the natural eccentricities e_{ox} and e_{oy} are defined as in **4.2.3.2(6)**.

NOTE The value of the importance factor, γ_I, below which the simplification of the analysis in accordance with **4.3.3.1(8)** is allowed in a country, may be found in its National Annex.

(9) In buildings satisfying all the conditions of **(8)** of this subclause with the exception of d), linear-elastic analysis using two planar models, one for each main horizontal direction, may also be performed, but in such cases all seismic action effects resulting from the analysis should be multiplied by 1,25.

(10)P Buildings not conforming to the criteria in **(7)** to **(9)** of this clause shall be analysed using a spatial model.

(11)P Whenever a spatial model is used, the design seismic action shall be applied along all relevant horizontal directions (with regard to the structural layout of the building) and their orthogonal horizontal directions. For buildings with resisting elements in two perpendicular directions these two directions shall be considered as the relevant directions.

4.3.3.2 Lateral force method of analysis

4.3.3.2.1 General

(1)P This type of analysis may be applied to buildings whose response is not significantly affected by contributions from modes of vibration higher than the fundamental mode in each principal direction.

(2) The requirement in **(1)**P of this subclause is deemed to be satisfied in buildings which fulfil both of the two following conditions.

a) they have fundamental periods of vibration T_1 in the two main directions which are smaller than the following values

$$T_1 \leq \begin{cases} 4 \cdot T_C \\ 2{,}0\,\text{s} \end{cases} \tag{4.4}$$

where T_C is defined in **3.2.2.2**;

b) they meet the criteria for regularity in elevation given in **4.2.3.3**.

4.3.3.2.2 Base shear force

(1)P The seismic base shear force F_b, for each horizontal direction in which the building is analysed, shall be determined using the following expression:

Sofort-Download-Beuth-Book Supply Bureau-KdNr.7066075-ID.SCBLGSA1OBPULJD3QN0TD2AJ.1-2016-08-02 13:22:06

SUPPLIED BY BSB EDGE UNDER LICENCE FROM DIN FOR RAJARAMBAPU INSTITUTE OF TECHNOLOGY - SANGLI DIST. VIDE BSB EDGE ORDER REGISTRATION NO. ORD01-1088 ON 02/08/2016

$$F_b = S_d(T_1) \cdot m \cdot \lambda \tag{4.5}$$

where

$S_d(T_1)$ is the ordinate of the design spectrum (see **3.2.2.5**) at period T_1;

T_1 is the fundamental period of vibration of the building for lateral motion in the direction considered;

m is the total mass of the building, above the foundation or above the top of a rigid basement, computed in accordance with **3.2.4(2)**;

λ is the correction factor, the value of which is equal to: $\lambda = 0{,}85$ if $T_1 \leq 2\ T_C$ and the building has more than two storeys, or $\lambda = 1{,}0$ otherwise.

NOTE The factor λ accounts for the fact that in buildings with at least three storeys and translational degrees of freedom in each horizontal direction, the effective modal mass of the 1st (fundamental) mode is smaller, on average by 15%, than the total building mass.

(2) [AC⟩ For the determination of the fundamental period of vibration T_1 ⟨AC] of the building, expressions based on methods of structural dynamics (for example the Rayleigh method) may be used.

(3) For buildings with heights of up to 40 m the value of T_1 (in s) may be approximated by the following expression:

$$T_1 = C_t \cdot H^{3/4} \tag{4.6}$$

where

C_t is 0,085 for moment resistant space steel frames, 0,075 for moment resistant space concrete frames and for eccentrically braced steel frames and 0,050 for all other structures;

H is the height of the building, in m, from the foundation or from the top of a rigid basement.

(4) Alternatively, for structures with concrete or masonry shear walls the value C_t in expression (4.6) may be taken as being

$$C_t = 0{,}075 / \sqrt{A_c} \tag{4.7}$$

where

[AC⟩ $$A_c = \Sigma \left[A_i \cdot \left(0{,}2 + \left(l_{wi} / H \right)^2 \right) \right]$$ ⟨AC] (4.8)

and

A_c is the total effective area of the shear walls in the first storey of the building, in m^2;

A_i is the effective cross-sectional area of shear wall i in the direction considered in the first storey of the building, in m^2;

Sofort-Download-Beuth-Book Supply Bureau-KdNr.7066075-ID.SCBLGSA1OBPULJD3QN0TD2AJ.1-2016-08-02 13:22:06

SUPPLIED BY BSB EDGE UNDER LICENCE FROM DIN FOR RAJARAMBAPU INSTITUTE OF TECHNOLOGY - SANGLI DIST. VIDE BSB EDGE ORDER REGISTRATION NO. ORD01-1088 ON 02/08/2016

H is as in **(3)** of this subclause;

l_{wi} is the length of the shear wall i in the first storey in the direction parallel to the applied forces, in m, with the restriction that l_{wi}/H should not exceed 0,9.

(5) Alternatively, the estimation of T_1 (in s) may be made by using the following expression:

$$T_1 = 2 \cdot \sqrt{d} \tag{4.9}$$

where

d is the lateral elastic displacement of the top of the building, in m, due to the gravity loads applied in the horizontal direction.

4.3.3.2.3 Distribution of the horizontal seismic forces

(1) The fundamental mode shapes in the horizontal directions of analysis of the building may be calculated using methods of structural dynamics or may be approximated by horizontal displacements increasing linearly along the height of the building.

(2)P The seismic action effects shall be determined by applying, to the two planar models, horizontal forces F_i to all storeys.

$$F_i = F_b \cdot \frac{s_i \cdot m_i}{\Sigma\, s_j \cdot m_j} \tag{4.10}$$

where

F_i is the horizontal force acting on storey i;

F_b is the seismic base shear in accordance with expression (4.5);

s_i, s_j are the displacements of masses m_i, m_j in the fundamental mode shape;

m_i, m_j are the storey masses computed in accordance with **3.2.4(2)**.

(3) When the fundamental mode shape is approximated by horizontal displacements increasing linearly along the height, the horizontal forces F_i should be taken as being given by:

$$F_i = F_b \cdot \frac{z_i \cdot m_i}{\Sigma\, z_j \cdot m_j} \tag{4.11}$$

where

z_i, z_j are the heights of the masses m_i m_j above the level of application of the seismic action (foundation or top of a rigid basement).

(4)P The horizontal forces F_i determined in accordance with this clause shall be distributed to the lateral load resisting system assuming the floors are rigid in their plane.

Sofort-Download-Beuth-Book Supply Bureau-KdNr.7066075-ID.SCBLGSA1OBPULJD3QN0TD2AJ.1-2016-08-02 13:22:06

SUPPLIED BY BSB EDGE UNDER LICENCE FROM DIN FOR RAJARAMBAPU INSTITUTE OF TECHNOLOGY - SANGLI DIST. VIDE BSB EDGE ORDER REGISTRATION NO. ORD01-1088 ON 02/08/2016

SUPPLIED BY BSB EDGE UNDER LICENCE FROM DIN FOR RAJARAMBAPU INSTITUTE OF TECHNOLOGY - SANGLI DIST. VIDE BSB EDGE ORDER REGISTRATION NO. ORD01-1088 ON 02/08/2016

Sofort-Download-Beuth-Book Supply Bureau-KdNr.7066075-ID.SCBLGSA1OBPULJD3QN0TD2AJ.1-2016-08-02 13:22:06

4.3.3.2.4 Torsional effects

(1) If the lateral stiffness and mass are symmetrically distributed in plan and unless the accidental eccentricity of **4.3.2(1)**P is taken into account by a more exact method (e.g. that of **4.3.3.3.3(1)**), the accidental torsional effects may be accounted for by multiplying the action effects in the individual load resisting elements resulting from the application of **4.3.3.2.3(4)** by a factor δ given by

$$\delta = 1 + 0{,}6 \cdot \frac{x}{L_e} \tag{4.12}$$

where

x is the distance of the element under consideration from the centre of mass of the building in plan, measured perpendicularly to the direction of the seismic action considered;

L_e is the distance between the two outermost lateral load resisting elements, measured perpendicularly to the direction of the seismic action considered.

(2) If the analysis is performed using two planar models, one for each main horizontal direction, torsional effects may be determined by doubling the accidental eccentricity e_{ai} of expression (4.3) and applying **(1)** of this subclause with factor 0,6 in expression (4.12) increased to 1,2.

4.3.3.3 Modal response spectrum analysis

4.3.3.3.1 General

(1)P This type of analysis shall be applied to buildings which do not satisfy the conditions given in **4.3.3.2.1(2)** for applying the lateral force method of analysis.

(2)P The response of all modes of vibration contributing significantly to the global response shall be taken into account.

(3) The requirements specified in paragraph **(2)**P may be deemed to be satisfied if either of the following can be demonstrated:

- the sum of the effective modal masses for the modes taken into account amounts to at least 90% of the total mass of the structure;
- all modes with effective modal masses greater than 5% of the total mass are taken into account.

NOTE The effective modal mass m_k, corresponding to a mode k, is determined so that the base shear force F_{bk}, acting in the direction of application of the seismic action, may be expressed as $F_{bk} = S_d(T_k)\, m_k$. It can be shown that the sum of the effective modal masses (for all modes and a given direction) is equal to the mass of the structure.

(4) When using a spatial model, the above conditions should be verified for each relevant direction.

(5) If the requirements specified in **(3)** cannot be satisfied (e.g. in buildings with a significant contribution from torsional modes), the minimum number k of modes to be taken into account in a spatial analysis should satisfy both the two following conditions:

$$k \geq 3 \cdot \sqrt{n} \tag{4.13}$$

and

$$T_{\mathrm{k}} \leq 0{,}20\,\mathrm{s} \tag{4.14}$$

where

k is the number of modes taken into account;

n is the number of storeys above the foundation or the top of a rigid basement;

T_{k} is the period of vibration of mode k.

4.3.3.3.2 Combination of modal responses

(1) The response in two vibration modes i and j (including both translational and torsional modes) may be taken as independent of each other, if their periods T_{i} and T_{j} satisfy (with $T_{\mathrm{j}} \leq T_{\mathrm{i}}$) the following condition:

$$T_{\mathrm{j}} \leq 0{,}9 \cdot T_{\mathrm{i}} \tag{4.15}$$

(2) Whenever all relevant modal responses (see **4.3.3.3.1(3)-(5)**) may be regarded as independent of each other, the maximum value E_{E} of a seismic action effect may be taken as:

$$E_{\mathrm{E}} = \sqrt{\Sigma\, E_{\mathrm{Ei}}{}^{2}} \tag{4.16}$$

where

E_{E} is the seismic action effect under consideration (force, displacement, etc.);

E_{Ei} is the value of this seismic action effect due to the vibration mode i.

(3)P If **(1)** is not satisfied, more accurate procedures for the combination of the modal maxima, such as the "Complete Quadratic Combination" shall be adopted.

4.3.3.3.3 Torsional effects

(1) Whenever a spatial model is used for the analysis, the accidental torsional effects referred to in **4.3.2(1)**P may be determined as the envelope of the effects resulting from the application of static loadings, consisting of sets of torsional moments M_{ai} about the vertical axis of each storey i:

$$M_{\mathrm{ai}} = e_{\mathrm{ai}} \cdot F_{\mathrm{i}} \tag{4.17}$$

where

M_{ai} is the torsional moment applied at storey i about its vertical axis;

Sofort-Download-Beuth-Book Supply Bureau-KdNr.7066075-ID.SCBLGSA1OBPULJD3QN0TD2AJ.1-2016-08-02 13:22:06

SUPPLIED BY BSB EDGE UNDER LICENCE FROM DIN FOR RAJARAMBAPU INSTITUTE OF TECHNOLOGY - SANGLI DIST. VIDE BSB EDGE ORDER REGISTRATION NO. ORD01-1088 ON 02/08/2016

e_{ai} is the accidental eccentricity of storey mass i in accordance with expression (4.3) for all relevant directions;

F_i is the horizontal force acting on storey i, as derived in **4.3.3.2.3** for all relevant directions.

(2) The effects of the loadings in accordance with **(1)** should be taken into account with positive and negative signs (the same sign for all storeys).

(3) Whenever two separate planar models are used for the analysis, the torsional effects may be accounted for by applying the rules of **4.3.3.2.4(2)** to the action effects computed in accordance with **4.3.3.3.2**.

4.3.3.4 Non-linear methods

4.3.3.4.1 General

(1)P The mathematical model used for elastic analysis shall be extended to include the strength of structural elements and their post-elastic behaviour.

(2) As a minimum, a bilinear force–deformation relationship should be used at the element level. In reinforced concrete and masonry buildings, the elastic stiffness of a bilinear force-deformation relation should correspond to that of cracked sections (see **4.3.1(7)**). In ductile elements, expected to exhibit post-yield excursions during the response, the elastic stiffness of a bilinear relation should be the secant stiffness to the yield-point. Trilinear force–deformation relationships, which take into account pre-crack and post-crack stiffnesses, are allowed.

(3) Zero post-yield stiffness may be assumed. If strength degradation is expected, e.g. for masonry walls or other brittle elements, it has to be included in the force–deformation relationships of those elements.

(4) Unless otherwise specified, element properties should be based on mean values of the properties of the materials. For new structures, mean values of material properties may be estimated from the corresponding characteristic values on the basis of information provided in EN 1992 to EN 1996 or in material ENs.

(5)P Gravity loads in accordance with **3.2.4** shall be applied to appropriate elements of the mathematical model.

(6) Axial forces due to gravity loads should be taken into account when determining force – deformation relations for structural elements. Bending moments in vertical structural elements due to gravity loads may be neglected, unless they substantially influence the global structural behaviour.

(7)P The seismic action shall be applied in both positive and negative directions and the maximum seismic effects as a result of this shall be used.

Sofort-Download-Beuth-Book Supply Bureau-KdNr.7066075-ID.SCBLGSA1OBPULJD3QN0TD2AJ.1-2016-08-02 13:22:06

SUPPLIED BY BSB EDGE UNDER LICENCE FROM DIN FOR RAJARAMBAPU INSTITUTE OF TECHNOLOGY - SANGLI DIST. VIDE BSB EDGE ORDER REGISTRATION NO. ORD01-1088 ON 02/08/2016

SUPPLIED BY BSB EDGE UNDER LICENCE FROM DIN FOR RAJARAMBAPU INSTITUTE OF TECHNOLOGY - SANGLI DIST. VIDE BSB EDGE ORDER REGISTRATION NO. ORD01-1088 ON 02/08/2016

Sofort-Download-Beuth-Book Supply Bureau-KdNr.7066075-ID.SCBLGSA1OBPULJD3QN0TD2AJ.1-2016-08-02 13:22:06

4.3.3.4.2 Non-linear static (pushover) analysis

4.3.3.4.2.1 General

(1) Pushover analysis is a non-linear static analysis carried out under conditions of constant gravity loads and monotonically increasing horizontal loads. It may be applied to verify the structural performance of newly designed and of existing buildings for the following purposes:

a) to verify or revise the overstrength ratio values α_u/α_1 (see **5.2.2.2**, **6.3.2**, **7.3.2**);

b) to estimate the expected plastic mechanisms and the distribution of damage;

c) to assess the structural performance of existing or retrofitted buildings for the purposes of EN 1998-3;

d) as an alternative to the design based on linear-elastic analysis which uses the behaviour factor q. In that case, the target displacement indicated in **4.3.3.4.2.6(1)**P should be used as the basis of the design.

(2)P Buildings not conforming to the regularity criteria of **4.2.3.2** or the criteria of **4.3.3.1(8)**a)-e) shall be analysed using a spatial model. Two independent analyses with lateral loads applied in one direction only may be performed.

(3) For buildings conforming to the regularity criteria of **4.2.3.2** or the criteria of **4.3.3.1(8)**a)-d) the analysis may be performed using two planar models, one for each main horizontal direction.

(4) For low-rise masonry buildings, in which structural wall behaviour is dominated by shear, each storey may be analysed independently.

(5) The requirements in **(4)** are deemed to be satisfied if the number of storeys is 3 or less and if the average aspect (height to width) ratio of structural walls is less than 1,0.

4.3.3.4.2.2 Lateral loads

(1) At least two vertical distributions of the lateral loads should be applied:

- a “uniform” pattern, based on lateral forces that are proportional to mass regardless of elevation (uniform response acceleration);
- a “modal” pattern, proportional to lateral forces consistent with the lateral force distribution in the direction under consideration determined in elastic analysis (in accordance with **4.3.3.2** or **4.3.3.3**).

(2)P Lateral loads shall be applied at the location of the masses in the model. Accidental eccentricity in accordance with **4.3.2(1)**P shall be taken into account.

4.3.3.4.2.3 Capacity curve

(1) The relation between base shear force and the control displacement (the “capacity curve”) should be determined by pushover analysis for values of the control

displacement ranging between zero and the value corresponding to 150% of the target displacement, defined in **4.3.3.4.2.6**.

(2) The control displacement may be taken at the centre of mass of the roof of the building. The top of a penthouse should not be considered as the roof.

4.3.3.4.2.4 Overstrength factor

(1) When the overstrength ratio (α_u/α_1) is determined by pushover analysis, the lower value of the overstrength factor obtained for the two lateral load distributions should be used.

4.3.3.4.2.5 Plastic mechanism

(1)P The plastic mechanism shall be determined for the two lateral load distributions applied. The plastic mechanisms shall conform to the mechanisms on which the behaviour factor q used in the design is based.

4.3.3.4.2.6 Target displacement

(1)P The target displacement shall be defined as the seismic demand derived from the elastic response spectrum of **3.2.2.2** in terms of the displacement of an equivalent single-degree-of-freedom system.

NOTE Informative Annex B gives a procedure for the determination of the target displacement from the elastic response spectrum.

4.3.3.4.2.7 Procedure for the estimation of the torsional effects

(1)P Pushover analysis performed with the force patterns specified in **4.3.3.4.2.2** may significantly underestimate deformations at the stiff/strong side of a torsionally flexible structure, i.e. a structure with a predominantly torsional first mode of vibration. The same applies for the stiff/strong side deformations in one direction of a structure with a predominately torsional second mode of vibration. For such structures, displacements at the stiff/strong side shall be increased, compared to those in the corresponding torsionally balanced structure.

NOTE The stiff/strong side in plan is the one that develops smaller horizontal displacements than the opposite side, under static lateral forces parallel to it. For torsionally flexible structures, the dynamic displacements at the stiff/strong side may considerably increase due to the influence of the predominantly torsional mode.

(2) The requirement specified in **(1)** of this subclause is deemed to be satisfied if the amplification factor to be applied to the displacements of the stiff/strong side is based on the results of an elastic modal analysis of the spatial model.

(3) If two planar models are used for analysis of structures which are regular in plan, the torsional effects may be estimated in accordance with **4.3.3.2.4** or **4.3.3.3.3**.

4.3.3.4.3 Non-linear time-history analysis

(1) The time-dependent response of the structure may be obtained through direct numerical integration of its differential equations of motion, using the accelerograms defined in **3.2.3.1** to represent the ground motions.

Sofort-Download-Beuth-Book Supply Bureau-KdNr.7066075-ID.SCBLGSA1OBPULJD3QN0TD2AJ.1-2016-08-02 13:22:06

SUPPLIED BY BSB EDGE UNDER LICENCE FROM DIN FOR RAJARAMBAPU INSTITUTE OF TECHNOLOGY - SANGLI DIST. VIDE BSB EDGE ORDER REGISTRATION NO. ORD01-1088 ON 02/08/2016

(2) The structural element models should conform to **4.3.3.4.1(2)-(4)** and be supplemented with rules describing the element behaviour under post-elastic unloading-reloading cycles. These rules should realistically reflect the energy dissipation in the element over the range of displacement amplitudes expected in the seismic design situation.

(3) If the response is obtained from at least 7 nonlinear time-history analyses with ground motions in accordance with **3.2.3.1**, the average of the response quantities from all of these analyses should be used as the design value of the action effect E_d in the relevant verifications of **4.4.2.2**. Otherwise, the most unfavourable value of the response quantity among the analyses should be used as E_d.

4.3.3.5 Combination of the effects of the components of the seismic action

4.3.3.5.1 Horizontal components of the seismic action

(1)P In general the horizontal components of the seismic action (see **3.2.2.1(3)**) shall be taken as acting simultaneously.

(2) The combination of the horizontal components of the seismic action may be accounted for as follows.

a) The structural response to each component shall be evaluated separately, using the combination rules for modal responses given in **4.3.3.3.2**.

b) The maximum value of each action effect on the structure due to the two horizontal components of the seismic action may then be estimated by the square root of the sum of the squared values of the action effect due to each horizontal component.

c) The rule b) generally gives a safe side estimate of the probable values of other action effects simultaneous with the maximum value obtained as in b). More accurate models may be used for the estimation of the probable simultaneous values of more than one action effect due to the two horizontal components of the seismic action.

(3) As an alternative to b) and c) of **(2)** of this subclause, the action effects due to the combination of the horizontal components of the seismic action may be computed using both of the two following combinations:

a) E_{Edx} "+" $0{,}30E_{Edy}$ (4.18)

b) $0{,}30E_{Edx}$ "+" E_{Edy} (4.19)

where

"+" implies "to be combined with";

E_{Edx} represents the action effects due to the application of the seismic action along the chosen horizontal axis x of the structure;

E_{Edy} represents the action effects due to the application of the same seismic action along the orthogonal horizontal axis y of the structure.

Sofort-Download-Beuth-Book Supply Bureau-KdNr.7066075-ID.SCBLGSA1OBPULJD3QN0TD2AJ.1-2016-08-02 13:22:06

SUPPLIED BY BSB EDGE UNDER LICENCE FROM DIN FOR RAJARAMBAPU INSTITUTE OF TECHNOLOGY - SANGLI DIST. VIDE BSB EDGE ORDER REGISTRATION NO. ORD01-1088 ON 02/08/2016

(4) If the structural system or the regularity classification of the building in elevation is different in different horizontal directions, the value of the behaviour factor q may also be different.

(5)P The sign of each component in the above combinations shall be taken as being the most unfavourable for the particular action effect under consideration.

(6) When using non-linear static (pushover) analysis and applying a spatial model, the combination rules of **(2)** and **(3)** in this subclause should be applied, considering the forces and deformations due to the application of the target displacement in the x direction as E_{Edx} and the forces and deformations due to the application of the target displacement in the y direction as E_{Edy}. The internal forces resulting from the combination should not exceed the corresponding capacities.

(7)P When using non-linear time-history analysis and employing a spatial model of the structure, simultaneously acting accelerograms shall be taken as acting in both horizontal directions.

(8) For buildings satisfying the regularity criteria in plan and in which walls or independent bracing systems in the two main horizontal directions are the only primary seismic elements (see **4.2.2**), the seismic action may be assumed to act separately and without combinations **(2)** and **(3)** of this subclause, along the two main orthogonal horizontal axes of the structure.

4.3.3.5.2 Vertical component of the seismic action

(1) If a_{vg} is greater than 0,25 g (2,5 m/s^2) the vertical component of the seismic action, as defined in **3.2.2.3**, should be taken into account in the cases listed below:

- for horizontal or nearly horizontal structural members spanning 20 m or more;
- for horizontal or nearly horizontal cantilever components longer than 5 m;
- for horizontal or nearly horizontal pre-stressed components;
- for beams supporting columns;
- in base-isolated structures.

(2) The analysis for determining the effects of the vertical component of the seismic action may be based on a partial model of the structure, which includes the elements on which the vertical component is considered to act (e.g. those listed in the previous paragraph) and takes into account the stiffness of the adjacent elements.

(3) The effects of the vertical component need be taken into account only for the elements under consideration (e.g. those listed in **(1)** of this subclause) and their directly associated supporting elements or substructures.

(4) If the horizontal components of the seismic action are also relevant for these elements, the rules in **4.3.3.5.1(2)** may be applied, extended to three components of the seismic action. Alternatively, all three of the following combinations may be used for the computation of the action effects:

a) E_{Edx} "+" 0,30 E_{Edy} "+" 0,30 E_{Edz} (4.20)

Sofort-Download-Beuth-Book Supply Bureau-KdNr.7066075-ID.SCBLGSA1OBPULJD3QN0TD2AJ.1-2016-08-02 13:22:06

SUPPLIED BY BSB EDGE UNDER LICENCE FROM DIN FOR RAJARAMBAPU INSTITUTE OF TECHNOLOGY - SANGLI DIST. VIDE BSB EDGE ORDER REGISTRATION NO. ORD01-1088 ON 02/08/2016

b) 0,30 E_{Edx} "+" E_{Edy} "+" 0,30 E_{Edz} (4.21)

c) 0,30 E_{Edx} "+" 0,30 E_{Edy} "+" E_{Edz} (4.22)

where

"+" implies "to be combined with";

E_{Edx} and E_{Edy} are as in **4.3.3.5.1(3)**;

E_{Edz} represents the action effects due to the application of the vertical component of the design seismic action as defined in **3.2.2.5(5)** and **(6)**.

(5) If non-linear static (pushover) analysis is performed, the vertical component of the seismic action may be neglected.

4.3.4 Displacement calculation

(1)P If linear analysis is performed the displacements induced by the design seismic action shall be calculated on the basis of the elastic deformations of the structural system by means of the following simplified expression:

$$d_s = q_d \, d_e \tag{4.23}$$

where

d_s is the displacement of a point of the structural system induced by the design seismic action;

q_d is the displacement behaviour factor, assumed equal to q unless otherwise specified;

d_e is the displacement of the same point of the structural system, as determined by a linear analysis based on the design response spectrum in accordance with **3.2.2.5.**

The value of d_s does not need to be larger than the value derived from the elastic spectrum.

NOTE In general q_d is larger than q if the fundamental period of the structure is less than T_C (see Figure B.2).

(2)P When determining the displacements d_e, the torsional effects of the seismic action shall be taken into account.

(3) For both static and dynamic non-linear analysis, the displacements determined are those obtained directly from the analysis without further modification.

4.3.5 Non-structural elements

4.3.5.1 General

(1)P Non-structural elements (appendages) of buildings (e.g. parapets, gables, antennae, mechanical appendages and equipment, curtain walls, partitions, railings) that might, in case of failure, cause risks to persons or affect the main structure of the

Sofort-Download-Beuth-Book Supply Bureau-KdNr.7066075-ID.SCBLGSA1OBPULJD3QN0TD2AJ.1-2016-08-02 13:22:06

SUPPLIED BY BSB EDGE UNDER LICENCE FROM DIN FOR RAJARAMBAPU INSTITUTE OF TECHNOLOGY - SANGLI DIST. VIDE BSB EDGE ORDER REGISTRATION NO. ORD01-1088 ON 02/08/2016

building or services of critical facilities, shall, together with their supports, be verified to resist the design seismic action.

(2)P For non-structural elements of great importance or of a particularly dangerous nature, the seismic analysis shall be based on a realistic model of the relevant structures and on the use of appropriate response spectra derived from the response of the supporting structural elements of the main seismic resisting system.

(3) In all other cases properly justified simplifications of this procedure (e.g. as given in **4.3.5.2(2)**) are allowed.

4.3.5.2 Verification

(1)P The non-structural elements, as well as their connections and attachments or anchorages, shall be verified for the seismic design situation (see **3.2.4**).

NOTE The local transmission of actions to the structure by the fastening of non-structural elements and their influence on the structural behaviour should be taken into account. The requirements for fastenings to concrete are given in EN1992-1-1:2004, **2.7**.

(2) The effects of the seismic action may be determined by applying to the non-structural element a horizontal force F_a which is defined as follows:

$$F_a = (S_a \cdot W_a \cdot \gamma_a) / q_a \tag{4.24}$$

where

F_a is the horizontal seismic force, acting at the centre of mass of the non-structural element in the most unfavourable direction;

W_a is the weight of the element;

S_a is the seismic coefficient applicable to non-structural elements, (see **(3)** of this subclause);

γ_a is the importance factor of the element, see **4.3.5.3**;

q_a is the behaviour factor of the element, see Table 4.4.

(3) The seismic coefficient S_a may be calculated using the following expression:

$$S_a = \alpha \cdot S \cdot [3(1 + z/H) / (1 + (1 - T_a/T_1)^2) - 0{,}5] \tag{4.25}$$

where

α is the ratio of the design ground acceleration on type A ground, a_g, to the acceleration of gravity g;

S is the soil factor;

T_a is the fundamental vibration period of the non-structural element;

T_1 is the fundamental vibration period of the building in the relevant direction;

z is the height of the non-structural element above the level of application of the seismic action (foundation or top of a rigid basement); and

Sofort-Download-Beuth-Book Supply Bureau-KdNr.7066075-ID.SCBLGSA1OBPULJD3QN0TD2AJ.1-2016-08-02 13:22:06

SUPPLIED BY BSB EDGE UNDER LICENCE FROM DIN FOR RAJARAMBAPU INSTITUTE OF TECHNOLOGY - SANGLI DIST. VIDE BSB EDGE ORDER REGISTRATION NO. ORD01-1088 ON 02/08/2016

H is the building height measured from the foundation or from the top of a rigid basement.

The value of the seismic coefficient S_a may not be taken less than $\alpha \cdot S$.

4.3.5.3 Importance factors

(1)P For the following non-structural elements the importance factor γ_a shall not be less than 1,5:

– anchorage elements of machinery and equipment required for life safety systems;

– tanks and vessels containing toxic or explosive substances considered to be hazardous to the safety of the general public.

(2) In all other cases the importance factor γ_a of non-structural elements may be assumed to be $\gamma_a = 1{,}0$.

4.3.5.4 Behaviour factors

(1) Upper limit values of the behaviour factor q_a for non-structural elements are given in Table 4.4.

Table 4.4: Values of q_a for non-structural elements

Type of non-structural element	q_a
Cantilevering parapets or ornamentations Signs and billboards Chimneys, masts and tanks on legs acting as unbraced cantilevers along more than one half of their total height	1,0
Exterior and interior walls Partitions and facades Chimneys, masts and tanks on legs acting as unbraced cantilevers along less than one half of their total height, or braced or guyed to the structure at or above their centre of mass Anchorage elements for permanent cabinets and book stacks supported by the floor Anchorage elements for false (suspended) ceilings and light fixtures	2,0

4.3.6 Additional measures for masonry infilled frames

4.3.6.1 General

(1)P **4.3.6.1** to **4.3.6.3** apply to frame or frame equivalent dual concrete systems of DCH (see Section **5**) and to steel or steel-concrete composite moment resisting frames of DCH (see Sections **6** and **7**) with interacting non-engineered masonry infills that fulfil all of the following conditions:

Sofort-Download-Beuth-Book Supply Bureau-KdNr.7066075-ID.SCBLGSA1OBPULJD3QN0TD2AJ.1-2016-08-02 13:22:06

SUPPLIED BY BSB EDGE UNDER LICENCE FROM DIN FOR RAJARAMBAPU INSTITUTE OF TECHNOLOGY - SANGLI DIST. VIDE BSB EDGE ORDER REGISTRATION NO. ORD01-1088 ON 02/08/2016

a) they are constructed after the hardening of the concrete frames or the assembly of the steel frame;

b) they are in contact with the frame (i.e. without special separation joints), but without structural connection to it (through ties, belts, posts or shear connectors);

c) they are considered in principle as non-structural elements.

(2) Although the scope of **4.3.6.1** to **4.3.6.3** is limited in accordance with **(1)**P of this subclause, these subclauses provide criteria for good practice, which it may be advantageous to adopt for DCM or DCL concrete, steel or composite structures with masonry infills. In particular for panels that might be vulnerable to out-of-plane failure, the provision of ties can reduce the hazard of falling masonry.

(3)P The provisions in **1.3(2)** regarding possible future modification of the structure shall apply also to the infills.

(4) For wall or wall-equivalent dual concrete systems, as well as for braced steel or steel-concrete composite systems, the interaction with the masonry infills may be neglected.

(5) If engineered masonry infills constitute part of the seismic resistant structural system, analysis and design should be carried out in accordance with the criteria and rules given in ▌AC⟩ Section **9** ⟨AC▌ for confined masonry.

(6) The requirements and criteria given in **4.3.6.2** are deemed to be satisfied if the rules given in **4.3.6.3** and **4.3.6.4** and the special rules in Sections **5** to **7** are followed.

4.3.6.2 Requirements and criteria

(1)P The consequences of irregularity in plan produced by the infills shall be taken into account.

(2)P The consequences of irregularity in elevation produced by the infills shall be taken into account.

(3)P Account shall be taken of the high uncertainties related to the behaviour of the infills (namely, the variability of their mechanical properties and of their attachment to the surrounding frame, their possible modification during the use of the building, as well as their non-uniform degree of damage suffered during the earthquake itself).

(4)P The possibly adverse local effects due to the frame-infill-interaction (e.g. shear failure of columns under shear forces induced by the diagonal strut action of infills) shall be taken into account (see Sections **5** to **7**).

4.3.6.3 Irregularities due to masonry infills

4.3.6.3.1 Irregularities in plan

(1) Strongly irregular, unsymmetrical or non-uniform arrangements of infills in plan should be avoided (taking into account the extent of openings and perforations in infill panels).

Sofort-Download-Beuth-Book Supply Bureau-KdNr.7066075-ID.SCBLGSA1OBPULJD3QN0TD2AJ.1-2016-08-02 13:22:06

SUPPLIED BY BSB EDGE UNDER LICENCE FROM DIN FOR RAJARAMBAPU INSTITUTE OF TECHNOLOGY - SANGLI DIST. VIDE BSB EDGE ORDER REGISTRATION NO. ORD01-1088 ON 02/08/2016

(2) In the case of severe irregularities in plan due to the unsymmetrical arrangement of the infills (e.g. existence of infills mainly along two consecutive faces of the building), spatial models should be used for the analysis of the structure. Infills should be included in the model and a sensitivity analysis regarding the position and the properties of the infills should be performed (e.g. by disregarding one out of three or four infill panels in a planar frame, especially on the more flexible sides). Special attention should be paid to the verification of structural elements on the flexible sides of the plan (i.e. furthest away from the side where the infills are concentrated) against the effects of any torsional response caused by the infills.

(3) Infill panels with more than one significant opening or perforation (e.g. a door and a window, etc.) should be disregarded in models for analyses in accordance with **(2)** of this subclause.

(4) When the masonry infills are not regularly distributed, but not in such a way as to constitute a severe irregularity in plan, these irregularities may be taken into account by increasing by a factor of 2,0 the effects of the accidental eccentricity calculated in accordance with **4.3.3.2.4** and **4.3.3.3.3**.

4.3.6.3.2 Irregularities in elevation

(1)P If there are considerable irregularities in elevation (e.g. drastic reduction of infills in one or more storeys compared to the others), the seismic action effects in the vertical elements of the respective storeys shall be increased.

(2) If a more precise model is not used, **(1)**P is deemed to be satisfied if the calculated seismic action effects are amplified by a magnification factor η defined as follows:

$$\eta = \left(1 + \Delta V_{\mathrm{Rw}} / \Sigma V_{\mathrm{Ed}}\right) \leq q \tag{4.26}$$

where

ΔV_{Rw} is the total reduction of the resistance of masonry walls in the storey concerned, compared to the more infilled storey above it; and

ΣV_{Ed} is the sum of the seismic shear forces acting on all vertical primary seismic members of the storey concerned.

(3) If expression (4.26) leads to a magnification factor η lower than 1,1, there is no need for modification of action effects.

4.3.6.4 Damage limitation of infills

(1) For the structural systems quoted in **4.3.6.1(1)**P belonging to all ductility classes, DCL, M or H, except in cases of low seismicity (see **3.2.1(4)**), appropriate measures should be taken to avoid brittle failure and premature disintegration of the infill walls (in particular of masonry panels with openings or of friable materials), as well as the partial or total out-of-plane collapse of slender masonry panels. Particular attention should be paid to masonry panels with a slenderness ratio (ratio of the smaller of length or height to thickness) of greater than 15.

Sofort-Download-Beuth-Book Supply Bureau-KdNr.7066075-ID.SCBLGSA1OBPULJD3QN0TD2AJ.1-2016-08-02 13:22:06

SUPPLIED BY BSB EDGE UNDER LICENCE FROM DIN FOR RAJARAMBAPU INSTITUTE OF TECHNOLOGY - SANGLI DIST. VIDE BSB EDGE ORDER REGISTRATION NO. ORD01-1088 ON 02/08/2016

(2) Examples of measures in accordance with **(1)** of this subclause, to improve both in-plane and out-of-plane integrity and behaviour, include light wire meshes well anchored on one face of the wall, wall ties fixed to the columns and cast into the bedding planes of the masonry, and concrete posts and belts across the panels and through the full thickness of the wall.

(3) If there are large openings or perforations in any of the infill panels, their edges should be trimmed with belts and posts.

4.4 Safety verifications

4.4.1 General

(1)P For the safety verifications the relevant limit states (see **4.4.2** and **4.4.3** below) and specific measures (see **2.2.4**) shall be considered.

(2) For buildings of importance classes other than IV (see Table 4.3) the verifications prescribed in **4.4.2** and **4.4.3** may be considered satisfied if both of the following two conditions are met.

a) The total base shear due to the seismic design situation calculated with a behaviour factor equal to the value applicable to low-dissipative structures (see **2.2.2(2)**)is less than that due to the other relevant action combinations for which the building is designed on the basis of a linear elastic analysis. This requirement relates to the shear force over the entire structure at the base level of the building (foundation or top of a rigid basement).

b) The specific measures described in **2.2.4** are taken into account, with the exception of the provisions in **2.2.4.1(2)-(3)**.

4.4.2 Ultimate limit state

4.4.2.1 General

(1)P The no-collapse requirement (ultimate limit state) under the seismic design situation is considered to have been met if the following conditions regarding resistance, ductility, equilibrium, foundation stability and seismic joints are met.

4.4.2.2 Resistance condition

(1)P The following relation shall be satisfied for all structural elements including connections and the relevant non-structural elements:

$$E_d \leq R_d \tag{4.27}$$

where

E_d is the design value of the action effect, due to the seismic design situation (see EN 1990:2002 **6.4.3.4**), including, if necessary, second order effects (see **(2)** of this subclause). Redistribution of bending moments in accordance with EN 1992-1-1:2004, 〖AC〗 EN 1993-1-1:2005 〈AC〗 and EN 1994-1-1:2004 is permitted;

Sofort-Download-Beuth-Book Supply Bureau-KdNr.7066075-ID.SCBLGSA1OBPULJD3QN0TD2AJ.1-2016-08-02 13:22:06

SUPPLIED BY BSB EDGE UNDER LICENCE FROM DIN FOR RAJARAMBAPU INSTITUTE OF TECHNOLOGY - SANGLI DIST. VIDE BSB EDGE ORDER REGISTRATION NO. ORD01-1088 ON 02/08/2016

R_d is the corresponding design resistance of the element, calculated in accordance with the rules specific to the material used (in terms of the characteristic values of material properties f_k and partial factor γ_M) and in accordance with the mechanical models which relate to the specific type of structural system, as given in Sections **5** to **9** of this document and in other relevant Eurocode documents.

(2) Second-order effects (P-Δ effects) need not be taken into account if the following condition is fulfilled in all storeys:

$$\theta = \frac{P_{tot} \cdot d_r}{V_{tot} \cdot h} \leq 0{,}10 \qquad (4.28)$$

where

θ is the interstorey drift sensitivity coefficient;

P_{tot} is the total gravity load at and above the storey considered in the seismic design situation;

d_r is the design interstorey drift, evaluated as the difference of the average lateral displacements d_s at the top and bottom of the storey under consideration and calculated in accordance with **4.3.4**;

V_{tot} is the total seismic storey shear; and

h is the interstorey height.

(3) If $0{,}1 < \theta \leq 0{,}2$, the second-order effects may approximately be taken into account by multiplying the relevant seismic action effects by a factor equal to $1/(1 - \theta)$.

(4)P The value of the coefficient θ shall not exceed 0,3.

(5) If design action effects E_d are obtained through a nonlinear method of analysis (see **4.3.3.4**), **(1)**P of this subclause should be applied in terms of forces only for brittle elements. For dissipative zones, which are designed and detailed for ductility, the resistance condition, expression (4.27), should be satisfied in terms of member deformations (e.g. plastic hinge or chord rotations), with appropriate material partial factors applied on member deformation capacities (see also EN 1992-1-1:2004, **5.7(2)**; **5.7(4)**P).

(6) Fatigue resistance does not need to be verified under the seismic design situation.

4.4.2.3 Global and local ductility condition

(1)P It shall be verified that both the structural elements and the structure as a whole possess adequate ductility, taking into account the expected exploitation of ductility, which depends on the selected system and the behaviour factor.

(2)P Specific material related requirements, as defined in Sections **5** to **9**, shall be satisfied, including, when indicated, capacity design provisions in order to obtain the

Sofort-Download-Beuth-Book Supply Bureau-KdNr.7066075-ID.SCBLGSA1OBPULJD3QN0TD2AJ.1-2016-08-02 13:22:06

SUPPLIED BY BSB EDGE UNDER LICENCE FROM DIN FOR RAJARAMBAPU INSTITUTE OF TECHNOLOGY - SANGLI DIST. VIDE BSB EDGE ORDER REGISTRATION NO. ORD01-1088 ON 02/08/2016

hierarchy of resistance of the various structural components necessary for ensuring the intended configuration of plastic hinges and for avoiding brittle failure modes.

(3)P In multi-storey buildings formation of a soft storey plastic mechanism shall be prevented, as such a mechanism might entail excessive local ductility demands in the columns of the soft storey.

(4) Unless otherwise specified in Sections **5** to **8**, to satisfy the requirement of **(3)**P, in frame buildings, including frame-equivalent ones as defined in **5.1.2(1)**, with two or more storeys, the following condition should be satisfied at all joints of primary or secondary seismic beams with primary seismic columns:

$$\sum M_{\mathrm{Rc}} \geq 1{,}3 \sum M_{\mathrm{Rb}} \tag{4.29}$$

where

$\sum M_{\mathrm{Rc}}$ is the sum of the design values of the moments of resistance of the columns framing the joint. The minimum value of column moments of resistance within the range of column axial forces produced by the seismic design situation should be used in expression (4.29); and

$\sum M_{\mathrm{Rb}}$ is the sum of the design values of the moments of resistance of the beams framing the joint. When partial strength connections are used, the moments of resistance of these connections are taken into account in the calculation of $\sum M_{\mathrm{Rb}}$.

NOTE A rigorous interpretation of expression (4.29) requires calculation of the moments at the centre of the joint. These moments correspond to development of the design values of the moments of resistance of the columns or beams at the outside faces of the joint, plus a suitable allowance for moments due to shears at the joint faces. However, the loss in accuracy is minor and the simplification achieved is considerable if the shear allowance is neglected. This approximation is then deemed to be acceptable.

(5) Expression (4.29) should be satisfied in two orthogonal vertical planes of bending, which, in buildings with frames arranged in two orthogonal directions, are defined by these two directions. It should be satisfied for both directions (positive and negative) of action of the beam moments around the joint, with the column moments always opposing the beam moments. If the structural system is a frame or equivalent to a frame in only one of the two main horizontal directions of the structural system, then expression (4.29) should be satisfied just within the vertical plane through that direction.

(6) The rules of **(4)** and **(5)** of this subclause are waived at the top level of multi-storey buildings.

(7) Capacity design rules to avoid brittle failure modes are given in Sections **5** to **7**.

(8) The requirements of **(1)**P and **(2)**P of this subclause are deemed to be satisfied if all of the following conditions are satisfied:

a) plastic mechanisms obtained by pushover analysis are satisfactory;

Sofort-Download-Beuth-Book Supply Bureau-KdNr.7066075-ID.SCBLGSA1OBPULJD3QN0TD2AJ.1-2016-08-02 13:22:06

SUPPLIED BY BSB EDGE UNDER LICENCE FROM DIN FOR RAJARAMBAPU INSTITUTE OF TECHNOLOGY - SANGLI DIST. VIDE BSB EDGE ORDER REGISTRATION NO. ORD01-1088 ON 02/08/2016

b) global, interstorey and local ductility and deformation demands from pushover analyses (with different lateral load patterns) do not exceed the corresponding capacities;

c) brittle elements remain in the elastic region.

4.4.2.4 Equilibrium condition

(1)P The building structure shall be stable - including overturning or sliding - in the seismic design situation specified in EN 1990:2002 **6.4.3.4**.

(2) In special cases the equilibrium may be verified by means of energy balance methods, or by geometrically non-linear methods with the seismic action defined as described in **3.2.3.1**.

4.4.2.5 Resistance of horizontal diaphragms

(1)P Diaphragms and bracings in horizontal planes shall be able to transmit, with sufficient overstrength, the effects of the design seismic action to the lateral load-resisting systems to which they are connected.

(2) The requirement in **(1)**P of this subclause is considered to be satisfied if for the relevant resistance verifications the seismic action effects in the diaphragm obtained from the analysis are multiplied by an overstrength factor γ_d greater than 1,0.

NOTE The values to be ascribed to γ_d for use in a country may be found in its National Annex. The recommended value for brittle failure modes, such as in shear in concrete diaphragms is 1.3, and for ductile failure modes is 1,1.

(3) Design provisions for concrete diaphragms are given in **5.10**.

4.4.2.6 Resistance of foundations

(1)P The foundation system shall conform to EN 1998-5:2004, Section **5** and to EN 1997-1:2004.

(2)P The action effects for the foundation elements shall be derived on the basis of capacity design considerations accounting for the development of possible overstrength, but they need not exceed the action effects corresponding to the response of the structure under the seismic design situation inherent to the assumption of an elastic behaviour (q = 1,0).

(3) If the action effects for the foundation have been determined using the value of the behaviour factor q applicable to low-dissipative structures (see **2.2.2(2)**), no capacity design considerations in accordance with **(2)**P are required.

(4) For foundations of individual vertical elements (walls or columns), **(2)**P of this subclause is considered to be satisfied if the design values of the action effects E_{Fd} on the foundations are derived as follows:

$$E_{Fd} = E_{F,G} + \gamma_{Rd} \Omega E_{F,E} \tag{4.30}$$

Sofort-Download-Beuth-Book Supply Bureau-KdNr.7066075-ID.SCBLGSA1OBPULJD3QN0TD2AJ.1-2016-08-02 13:22:06

SUPPLIED BY BSB EDGE UNDER LICENCE FROM DIN FOR RAJARAMBAPU INSTITUTE OF TECHNOLOGY - SANGLI DIST. VIDE BSB EDGE ORDER REGISTRATION NO. ORD01-1088 ON 02/08/2016

where

γ_{Rd} is the overstrength factor, taken as being equal to 1,0 for $q \leq 3$, or as being equal to 1,2 otherwise;

$E_{F,G}$ is the action effect due to the non-seismic actions included in the combination of actions for the seismic design situation (see EN 1990:2002, **6.4.3.4**);

$E_{F,E}$ is the action effect from the analysis of the design seismic action; and

Ω is the value of $(R_{di}/E_{di}) \leq q$ of the dissipative zone or element i of the structure which has the highest influence on the effect E_F under consideration; where

R_{di} is the design resistance of the zone or element i; and

E_{di} is the design value of the action effect on the zone or element i in the seismic design situation.

(5) For foundations of structural walls or of columns of moment-resisting frames, Ω is the minimum value of the ratio M_{Rd}/M_{Ed} in the two orthogonal principal directions at the lowest cross-section where a plastic hinge can form in the vertical element, in the seismic design situation.

(6) For the foundations of columns of concentric braced frames, Ω is the minimum value of the ratio $N_{pl,Rd}/N_{Ed}$ over all tensile diagonals of the braced frame (see **6.7.4(1)**).

(7) For the foundations of columns of eccentric braced frames, Ω is the minimum of the following two values: of the minimum ratio $V_{pl,Rd}/V_{Ed}$ among all short seismic links, and of the minimum ratio $M_{pl,Rd}/M_{Ed}$ among all intermediate and long links in the braced frame (see **6.8.3(1)**).

(8) For common foundations of more than one vertical element (foundation beams, strip footings, rafts, etc.) **(2)**P is deemed to be satisfied if the value of Ω used in expression (4.30) is derived from the vertical element with the largest horizontal shear force in the design seismic situation, or, alternatively, if a value $\Omega = 1$ is used in expression (4.30) with the value of the overstrength factor γ_{Rd} increased to 1,4.

4.4.2.7 Seismic joint condition

(1)P Buildings shall be protected from earthquake-induced pounding from adjacent structures or between structurally independent units of the same building.

(2) **(1)**P is deemed to be satisfied:

(a) for buildings, or structurally independent units, that do not belong to the same property, if the distance from the property line to the potential points of impact is not less than the maximum horizontal displacement of the building at the corresponding level, calculated in accordance with expression (4.23);

(b) for buildings, or structurally independent units, belonging to the same property, if the distance between them is not less than the square root of the sum- of the squares (SRSS) of the maximum horizontal displacements of the two buildings or units at the corresponding level, calculated in accordance with expression (4.23).

Sofort-Download-Beuth-Book Supply Bureau-KdNr.7066075-ID.SCBLGSA1OBPULJD3QN0TD2AJ.1-2016-08-02 13:22:06

SUPPLIED BY BSB EDGE UNDER LICENCE FROM DIN FOR RAJARAMBAPU INSTITUTE OF TECHNOLOGY - SANGLI DIST. VIDE BSB EDGE ORDER REGISTRATION NO. ORD01-1088 ON 02/08/2016

(3) If the floor elevations of the building or independent unit under design are the same as those of the adjacent building or unit, the above referred minimum distance may be reduced by a factor of 0,7.

4.4.3 Damage limitation

4.4.3.1 General

(1) The "damage limitation requirement" is considered to have been satisfied, if, under a seismic action having a larger probability of occurrence than the design seismic action corresponding to the "no-collapse requirement" in accordance with **2.1(1)**P and **3.2.1(3)**, the interstorey drifts are limited in accordance with **4.4.3.2**.

(2) Additional damage limitation verifications might be required in the case of buildings important for civil protection or containing sensitive equipment.

4.4.3.2 Limitation of interstorey drift

(1) Unless otherwise specified in Sections **5** to **9**, the following limits shall be observed:

a) for buildings having non-structural elements of brittle materials attached to the structure:

$$d_r \nu \leq 0{,}005\, h\,; \tag{4.31}$$

b) for buildings having ductile non-structural elements:

$$d_r \nu \leq 0{,}0075\, h\,; \tag{4.32}$$

c) for buildings having non-structural elements fixed in a way so as not to interfere with structural deformations, or without non-structural elements:

$$d_r \nu \leq 0{,}010\, h \tag{4.33}$$

where

d_r is the design interstorey drift as defined in **4.4.2.2(2)**;

h is the storey height;

ν is the reduction factor which takes into account the lower return period of the seismic action associated with the damage limitation requirement.

(2) The value of the reduction factor ν may also depend on the importance class of the building. Implicit in its use is the assumption that the elastic response spectrum of the seismic action under which the "damage limitation requirement" should be met (see **3.2.2.1(1)**P) has the same shape as the elastic response spectrum of the design seismic action corresponding to the "⟦AC⟧ no-collapse requirement ⟨AC⟧" in accordance with **2.1(1)**P and **3.2.1(3).**

NOTE The values to be ascribed to ν for use in a country may be found in its National Annex. Different values of ν may be defined for the various seismic zones of a country, depending on

Sofort-Download-Beuth-Book Supply Bureau-KdNr.7066075-ID.SCBLGSA1OBPULJD3QN0TD2AJ.1-2016-08-02 13:22:06

SUPPLIED BY BSB EDGE UNDER LICENCE FROM DIN FOR RAJARAMBAPU INSTITUTE OF TECHNOLOGY - SANGLI DIST. VIDE BSB EDGE ORDER REGISTRATION NO. ORD01-1088 ON 02/08/2016

the seismic hazard conditions and on the protection of property objective. The recommended values of ν are 0,4 for importance classes III and IV and $\nu = 0{,}5$ for importance classes I and II.

SUPPLIED BY BSB EDGE UNDER LICENCE FROM DIN FOR RAJARAMBAPU INSTITUTE OF TECHNOLOGY - SANGLI DIST. VIDE BSB EDGE ORDER REGISTRATION NO. ORD01-1088 ON 02/08/2016

Sofort-Download-Beuth-Book Supply Bureau-KdNr.7066075-ID.SCBLGSA1OBPULJD3QN0TD2AJ.1-2016-08-02 13:22:06

SUPPLIED BY BSB EDGE UNDER LICENCE FROM DIN FOR RAJARAMBAPU INSTITUTE OF TECHNOLOGY - SANGLI DIST. VIDE BSB EDGE ORDER REGISTRATION NO. ORD01-1088 ON 02/08/2016

Sofort-Download-Beuth-Book Supply Bureau-KdNr.7066075-ID.SCBLGSA1OBPULJD3QN0TD2AJ.1-2016-08-02 13:22:06

5 SPECIFIC RULES FOR CONCRETE BUILDINGS

5.1 General

5.1.1 Scope

(1)P Section **5** applies to the design of reinforced concrete buildings in seismic regions, henceforth called concrete buildings. Both monolithically cast-in-situ and precast buildings are addressed.

(2)P Concrete buildings with flat slab frames used as primary seismic elements in accordance with **4.2.2** are not fully covered by this section

(3)P For the design of concrete buildings EN 1992-1-1:2004 applies. The following rules are additional to those given in EN 1992-1-1:2004.

5.1.2 Terms and definitions

(1) The following terms are used in section **5** with the following meanings:

critical region
region of a primary seismic element, where the most adverse combination of action effects (M, N, V, T) occurs and where plastic hinges may form

NOTE In concrete buildings critical regions are dissipative zones. The length of the critical region is defined for each type of primary seismic element in the relevant clause of this section.

beam
structural element subjected mainly to transverse loads and to a normalised design axial force $\nu_d = N_{Ed}/A_c f_{cd}$ of not greater than 0,1 (compression positive)

NOTE In general, beams are horizontal.

column
structural element, supporting gravity loads by axial compression or subjected to a normalised design axial force $\nu_d = N_{Ed}/A_c f_{cd}$ of greater than 0,1

NOTE In general, columns are vertical.

wall
structural element supporting other elements and having an elongated cross-section with a length to thickness ratio l_w/b_w of greater than 4

NOTE In general, the plane of a wall is vertical.

ductile wall
wall fixed at its base so that the relative rotation of this base with respect to the rest of the structural system is prevented, and that is designed and detailed to dissipate energy in a flexural plastic hinge zone free of openings or large perforations, just above its base

SUPPLIED BY BSB EDGE UNDER LICENCE FROM DIN FOR RAJARAMBAPU INSTITUTE OF TECHNOLOGY - SANGLI DIST. VIDE BSB EDGE ORDER REGISTRATION NO. ORD01-1088 ON 02/08/2016

large lightly reinforced wall
wall with large cross-sectional dimensions, that is, a horizontal dimension l_w at least equal to 4,0 m or two-thirds of the height h_w of the wall, whichever is less, which is expected to develop limited cracking and inelastic behaviour under the seismic design situation

NOTE Such a wall is expected to transform seismic energy to potential energy (through temporary uplift of structural masses) and to energy dissipated in the soil through rigid-body rocking, etc. Due to its dimensions, or to lack-of-fixity at the base, or to connectivity with large transverse walls preventing plastic hinge rotation at the base, it cannot be designed effectively for energy dissipation through plastic hinging at the base.

coupled wall
structural element composed of two or more single walls, connected in a regular pattern by adequately ductile beams ("coupling beams"), able to reduce by at least 25% the sum of the base bending moments of the individual walls if working separately

wall system
structural system in which both vertical and lateral loads are mainly resisted by vertical structural walls, either coupled or uncoupled, whose shear resistance at the building base exceeds 65% of the total shear resistance of the whole structural system

NOTE 1 In this definition and in the ones to follow, the fraction of shear resistance may be substituted by the fraction of shear forces in the seismic design situation.

NOTE 2 If most of the total shear resistance of the walls included in the system is provided by coupled walls, the system may be considered as a coupled wall system.

frame system
structural system in which both the vertical and lateral loads are mainly resisted by spatial frames whose shear resistance at the building base exceeds 65% of the total shear resistance of the whole structural system

dual system
structural system in which support for the vertical loads is mainly provided by a spatial frame and resistance to lateral loads is contributed to in part by the frame system and in part by structural walls, coupled or uncoupled

frame-equivalent dual system
dual system in which the shear resistance of the frame system at the building base is greater than 50% of the total shear resistance of the whole structural system

wall-equivalent dual system
dual system in which the shear resistance of the walls at the building base is higher than 50% of the total seismic resistance of the whole structural system

torsionally flexible system
dual or wall system not having a minimum torsional rigidity (see **5.2.2.1(4)**P and **(6)**)

NOTE 1 An example of this is a structural system consisting of flexible frames combined with walls concentrated near the centre of the building in plan.

Sofort-Download-Beuth-Book Supply Bureau-KdNr.7066075-ID.SCBLGSA1OBPULJD3QN0TD2AJ.1-2016-08-02 13:22:06

NOTE 2 This definition does not cover systems containing several extensively perforated walls around vertical services and facilities. For such systems the most appropriate definition of the respective overall structural configuration should be chosen on a case-by-case basis.

inverted pendulum system
system in which 50% or more of the mass is in the upper third of the height of the structure, or in which the dissipation of energy takes place mainly at the base of a single building element

NOTE One-storey frames with column tops connected along both main directions of the building and with the value of the column normalized axial load ν_d nowhere exceeding 0,3, do not belong in this category.

5.2 Design concepts

5.2.1 Energy dissipation capacity and ductility classes

(1)P The design of earthquake resistant concrete buildings shall provide the structure with an adequate capacity to dissipate energy without substantial reduction of its overall resistance against horizontal and vertical loading. To this end, the requirements and criteria of Section **2** apply. In the seismic design situation adequate resistance of all structural elements shall be provided, and non-linear deformation demands in critical regions should be commensurate with the overall ductility assumed in calculations.

(2)P Concrete buildings may alternatively be designed for low dissipation capacity and low ductility, by applying only the rules of EN 1992-1-1:2004 for the seismic design situation, and neglecting the specific provisions given in this section, provided the requirements set forth in **5.3** are met. For buildings which are not base-isolated (see Section **10**), design with this alternative, termed ductility class L (low), is recommended only in low seismicity cases (see **3.2.1(4)**).

(3)P Earthquake resistant concrete buildings other than those to which **(2)**P of this subclause applies, shall be designed to provide energy dissipation capacity and an overall ductile behaviour. Overall ductile behaviour is ensured if the ductility demand involves globally a large volume of the structure spread to different elements and locations of all its storeys. To this end ductile modes of failure (e.g. flexure) should precede brittle failure modes (e.g. shear) with sufficient reliability.

(4)P Concrete buildings designed in accordance with **(3)**P of this subclause, are classified in two ductility classes DCM (medium ductility) and DCH (high ductility), depending on their hysteretic dissipation capacity. Both classes correspond to buildings designed, dimensioned and detailed in accordance with specific earthquake resistant provisions, enabling the structure to develop stable mechanisms associated with large dissipation of hysteretic energy under repeated reversed loading, without suffering brittle failures.

(5)P To provide the appropriate amount of ductility in ductility classes M and H , specific provisions for all structural elements shall be satisfied in each class (see **5.4** - **5.6**). In correspondence with the different available ductility in the two ductility classes, different values of the behaviour factor q are used for each class (see **5.2.2.2**).

Sofort-Download-Beuth-Book Supply Bureau-KdNr.7066075-ID.SCBLGSA1OBPULJD3QN0TD2AJ.1-2016-08-02 13:22:06

SUPPLIED BY BSB EDGE UNDER LICENCE FROM DIN FOR RAJARAMBAPU INSTITUTE OF TECHNOLOGY - SANGLI DIST. VIDE BSB EDGE ORDER REGISTRATION NO. ORD01-1088 ON 02/08/2016

NOTE Geographical limitations on the use of ductility classes M and H may be found in the relevant National Annex.

5.2.2 Structural types and behaviour factors

5.2.2.1 Structural types

(1)P Concrete buildings shall be classified into one of the following structural types (see **5.1.2**) according to their behaviour under horizontal seismic actions:

a) frame system;

b) dual system (frame or wall equivalent);

c) ductile wall system (coupled or uncoupled);

d) system of large lightly reinforced walls;

e) inverted pendulum system;

f) torsionally flexible system.

(2) Except for those classified as torsionally flexible systems, concrete buildings may be classified to one type of structural system in one horizontal direction and to another in the other.

(3)P A wall system shall be classified as a system of large lightly reinforced walls if, in the horizontal direction of interest, it comprises at least two walls with a horizontal dimension of not less than 4,0 m or $2h_w/3$, whichever is less, which collectively support at least 20% of the total gravity load from above in the seismic design situation, and has a fundamental period T_1, for assumed fixity at the base against rotation, less than or equal to 0,5 s. It is sufficient to have only one wall meeting the above conditions in one of the two directions, provided that: (a) the basic value of the behaviour factor, q_o, in that direction is divided by a factor of 1,5 over the value given in Table 5.1 and (b) that there are at least two walls meeting the above conditions in the orthogonal direction.

(4)P The first four types of systems (i.e. frame, dual and wall systems of both types) shall possess a minimum torsional rigidity that satisfies expression (4.1b) in both horizontal directions.

(5) For frame or wall systems with vertical elements that are well distributed in plan, the requirement specified in **(4)**P of this subclause may be considered as being satisfied without analytical verification.

(6) Frame, dual or wall systems without a minimum torsional rigidity in accordance with **(4)**P of this subclause should be classified as torsionally flexible systems.

(7) If a structural system does not qualify as a system of large lightly reinforced walls according to **(3)**P above, then all of its walls should be designed and detailed as ductile walls.

Sofort-Download-Beuth-Book Supply Bureau-KdNr.7066075-ID.SCBLGSA1OBPULJD3QN0TD2AJ.1-2016-08-02 13:22:06

SUPPLIED BY BSB EDGE UNDER LICENCE FROM DIN FOR RAJARAMBAPU INSTITUTE OF TECHNOLOGY - SANGLI DIST. VIDE BSB EDGE ORDER REGISTRATION NO. ORD01-1088 ON 02/08/2016

SUPPLIED BY BSB EDGE UNDER LICENCE FROM DIN FOR RAJARAMBAPU INSTITUTE OF TECHNOLOGY - SANGLI DIST. VIDE BSB EDGE ORDER REGISTRATION NO. ORD01-1088 ON 02/08/2016

Sofort-Download-Beuth-Book Supply Bureau-KdNr.7066075-ID.SCBLGSA1OBPULJD3QN0TD2AJ.1-2016-08-02 13:22:06

5.2.2.2 Behaviour factors for horizontal seismic actions

(1)P The upper limit value of the behaviour factor q, introduced in **3.2.2.5(3)** to account for energy dissipation capacity, shall be derived for each design direction as follows:

$$q = q_o k_w \geq 1{,}5 \tag{5.1}$$

where

q_o is the basic value of the behaviour factor, dependent on the type of the structural system and on its regularity in elevation (see **(2)** of this subclause);

k_w is the factor reflecting the prevailing failure mode in structural systems with walls (see **(11)**P of this subclause).

(2) For buildings that are regular in elevation in accordance with **4.2.3.3**, the basic values of q_o for the various structural types are given in Table 5.1.

Table 5.1: Basic value of the behaviour factor, q_o, for systems regular in elevation

STRUCTURAL TYPE	DCM	DCH
Frame system, dual system, coupled wall system	$3{,}0\alpha_u/\alpha_1$	$4{,}5\alpha_u/\alpha_1$
Uncoupled wall system	3,0	$4{,}0\alpha_u/\alpha_1$
Torsionally flexible system	2,0	3,0
Inverted pendulum system	1,5	2,0

(3) For buildings which are not regular in elevation, the value of q_o should be reduced by 20% (see **4.2.3.1(7)** and Table 4.1).

(4) α_1 and α_u are defined as follows:

α_1 is the value by which the horizontal seismic design action is multiplied in order to first reach the flexural resistance in any member in the structure, while all other design actions remain constant;

α_u is the value by which the horizontal seismic design action is multiplied, in order to form plastic hinges in a number of sections sufficient for the development of overall structural instability, while all other design actions remain constant. The factor α_u may be obtained from a nonlinear static (pushover) global analysis.

(5) When the multiplication factor α_u/α_1 has not been evaluated through an explicit calculation, for buildings which are regular in plan the following approximate values of α_u/α_1 may be used.

a) Frames or frame-equivalent dual systems.

– One-storey buildings: α_u/α_1=1,1;

– multistorey, one-bay frames: α_u/α_1=1,2;

– multistorey, multi-bay frames or frame-equivalent dual structures: α_u/α_1=1,3.

b) Wall- or wall-equivalent dual systems.

– wall systems with only two uncoupled walls per horizontal direction: α_u/α_1=1,0;

– other uncoupled wall systems: α_u/α_1=1,1;

– wall-equivalent dual, or coupled wall systems: α_u/α_1=1,2.

(6) For buildings which are not regular in plan (see **4.2.3.2**), the approximate value of α_u/α_1 that may be used when calculations are not performed for its evaluation are equal to the average of (a) 1,0 and of (b) the value given in **(5)** of this subclause.

(7) Values of α_u/α_1 higher than those given in **(5)** and **(6)** of this subclause may be used, provided that they are confirmed through a nonlinear static (pushover) global analysis.

(8) The maximum value of α_u/α_1 that may be used in the design is equal to 1,5, even when the analysis mentioned in **(7)** of this subclause results in higher values.

(9) The value of q_o given for inverted pendulum systems may be increased, if it can be shown that a correspondingly higher energy dissipation is ensured in the critical region of the structure.

(10) If a special and formal Quality System Plan is applied to the design, procurement and construction in addition to normal quality control schemes, increased values of q_o may be allowed. The increased values are not allowed to exceed the values given in Table 5.1 by more than 20%.

NOTE The values to be ascribed to q_o for use in a country and possibly in particular projects in the country depending on the special Quality System Plan, may be found in its National Annex.

(11)P The factor k_w reflecting the prevailing failure mode in structural systems with walls shall be taken as follows:

$$k_w = \begin{cases} 1{,}00, \text{ for frame and frame} - \text{equivalent dual systems} \\ (1+\alpha_o)/3 \le 1, \text{but not less than 0,5, for wall, wall - equivalent and torsionally} \\ \text{flexible systems} \end{cases} \quad (5.2)$$

where α_o is the prevailing aspect ratio of the walls of the structural system.

(12) If the aspect ratios h_{wi}/l_{wi} of all walls i of a structural system do not significantly differ, the prevailing aspect ratio α_o may be determined from the following expression:

$$\alpha_o = \sum h_{wi} / \sum l_{wi} \quad (5.3)$$

where

h_{wi} is the height of wall i; and

l_{wi} is the length of the section of wall i.

(13) Systems of large lightly reinforced walls cannot rely on energy dissipation in plastic hinges and so should be designed as DCM structures.

Sofort-Download-Beuth-Book Supply Bureau-KdNr.7066075-ID.SCBLGSA1OBPULJD3QN0TD2AJ.1-2016-08-02 13:22:06

SUPPLIED BY BSB EDGE UNDER LICENCE FROM DIN FOR RAJARAMBAPU INSTITUTE OF TECHNOLOGY - SANGLI DIST. VIDE BSB EDGE ORDER REGISTRATION NO. ORD01-1088 ON 02/08/2016

SUPPLIED BY BSB EDGE UNDER LICENCE FROM DIN FOR RAJARAMBAPU INSTITUTE OF TECHNOLOGY - SANGLI DIST. VIDE BSB EDGE ORDER REGISTRATION NO. ORD01-1088 ON 02/08/2016

Sofort-Download-Beuth-Book Supply Bureau-KdNr.7066075-ID.SCBLGSA1OBPULJD3QN0TD2AJ.1-2016-08-02 13:22:06

5.2.3 Design criteria

5.2.3.1 General

(1) The design concepts in **5.2.1** and in Section **2** shall be implemented into the earthquake resistant structural elements of concrete buildings as specified in **5.2.3.2** - **5.2.3.7**.

(2) The design criteria in **5.2.3.2** - **5.2.3.7** are deemed to be satisfied, if the rules in **5.4** - **5.7** are observed.

5.2.3.2 Local resistance condition

(1)P All critical regions of the structure shall meet the requirements of **4.4.2.2(1)**.

5.2.3.3 Capacity design rule

(1)P Brittle failure or other undesirable failure mechanisms (e.g. concentration of plastic hinges in columns of a single storey of a multistorey building, shear failure of structural elements, failure of beam-column joints, yielding of foundations or of any element intended to remain elastic) shall be prevented, by deriving the design action effects of selected regions from equilibrium conditions, assuming that plastic hinges with their possible overstrengths have been formed in their adjacent areas.

(2) The primary seismic columns of frame or frame-equivalent concrete structures should satisfy the capacity design requirements of **4.4.2.3(4)** with the following exemptions.

a) In plane frames with at least four columns of about the same cross-sectional size, it is not necessary to satisfy expression (4.29) in all columns, but just in three out of every four columns.

b) At the bottom storey of two-storey buildings if the value of the normalised axial load ν_d does not exceed 0,3 in any column.

(3) Slab reinforcement parallel to the beam and within the effective flange width specified in **5.4.3.1.1(3)**, should be assumed to contribute to the beam flexural capacities taken into account for the calculation of $\sum M_{Rb}$ in expression (4.29), if it is anchored beyond the beam section at the face of the joint.

5.2.3.4 Local ductility condition

(1)P For the required overall ductility of the structure to be achieved, the potential regions for plastic hinge formation, to be defined later for each type of building element, shall possess high plastic rotational capacities.

(2) Paragraph **(1)**P is deemed to be satisfied if the following conditions are met:

a) a sufficient curvature ductility is provided in all critical regions of primary seismic elements, including column ends (depending on the potential for plastic hinge formation in columns) (see **(3)** of this subclause);

b) local buckling of compressed steel within potential plastic hinge regions of primary seismic elements is prevented. Relevant application rules are given in **5.4.3** and **5.5.3**;

c) appropriate concrete and steel qualities are adopted to ensure local ductility as follows:

- the steel used in critical regions of primary seismic elements should have high uniform plastic elongation (see **5.3.2(1)**P, **5.4.1.1(3)**P, **5.5.1.1(3)**P);
- the tensile strength to yield strength ratio of the steel used in critical regions of primary seismic elements should be significantly higher than unity. Reinforcing steel conforming to the requirements of **5.3.2(1)**P, **5.4.1.1(3)**P or **5.5.1.1(3)**P, as appropriate, may be deemed to satisfy this requirement;
- the concrete used in primary seismic elements should possess adequate compressive strength and a fracture strain which exceeds the strain at the maximum compressive strength by an adequate margin. Concrete conforming to the requirements of **5.4.1.1(1)**P or **5.5.1.1(1)**P, as appropriate, may be deemed to satisfy these requirements.

(3) Unless more precise data are available and except when **(4)** of this subclause applies, **(2)**a) of this subclause is deemed to be satisfied if the curvature ductility factor μ_ϕ of these regions (defined as the ratio of the post-ultimate strength curvature at 85% of the moment of resistance, to the curvature at yield, provided that the limiting strains of concrete and steel ε_{cu} and $\varepsilon_{su,k}$ are not exceeded) is at least equal to the following values:

$$\mu_\phi = 2q_o - 1 \qquad \text{if } T_1 \geq T_C \tag{5.4}$$

$$\mu_\phi = 1+2(q_o - 1)T_C/T_1 \qquad \text{if } T_1 < T_C \tag{5.5}$$

where q_o is the corresponding basic value of the behaviour factor from Table 5.1 and T_1 is the fundamental period of the building, both taken within the vertical plane in which bending takes place, and T_C is the period at the upper limit of the constant acceleration region of the spectrum, according to **3.2.2.2(2)**P.

NOTE Expressions (5.4) and (5.5) are based on the relationship between μ_ϕ and the displacement ductility factor, μ_δ: $\mu_\phi = 2\mu_\delta - 1$, which is normally a conservative approximation for concrete members, and on the following relationship between μ_δ and q: $\mu_\delta = q$ if $T_1 \geq T_C$, $\mu_\delta = 1+(q-1)T_C/T_1$ if $T_1 < T_C$ (see also B5 in Informative Annex B). The value of q_o is used instead of that of q, because q will be lower than q_o in irregular buildings, recognising that a higher lateral resistance is needed to protect them. However, the local ductility demands may actually be higher than those corresponding to the value of q, so a reduction in the curvature ductility capacity is not warranted.

(4) In critical regions of primary seismic elements with longitudinal reinforcement of steel class B in EN 1992-1-1:2004, Table C.1, the curvature ductility factor μ_ϕ should be at least equal to 1,5 times the value given by expression (5.4) or (5.5), whichever applies.

Sofort-Download-Beuth-Book Supply Bureau-KdNr.7066075-ID.SCBLGSA1OBPULJD3QN0TD2AJ.1-2016-08-02 13:22:06

SUPPLIED BY BSB EDGE UNDER LICENCE FROM DIN FOR RAJARAMBAPU INSTITUTE OF TECHNOLOGY - SANGLI DIST. VIDE BSB EDGE ORDER REGISTRATION NO. ORD01-1088 ON 02/08/2016

SUPPLIED BY BSB EDGE UNDER LICENCE FROM DIN FOR RAJARAMBAPU INSTITUTE OF TECHNOLOGY - SANGLI DIST. VIDE BSB EDGE ORDER REGISTRATION NO. ORD01-1088 ON 02/08/2016

Sofort-Download-Beuth-Book Supply Bureau-KdNr.7066075-ID.SCBLGSA1OBPULJD3QN0TD2AJ.1-2016-08-02 13:22:06

5.2.3.5 Structural redundancy

(1)P A high degree of redundancy accompanied by redistribution capacity shall be sought, enabling a more widely spread energy dissipation and an increased total dissipated energy. Consequently structural systems of lower static indeterminacy shall be assigned lower behaviour factors (see Table 5.1). The necessary redistribution capacity shall be achieved through the local ductility rules given in **5.4** to **5.6**.

5.2.3.6 Secondary seismic members and resistances

(1)P A limited number of structural members may be designated as secondary seismic members in accordance with **4.2.2**.

(2) Rules for the design and detailing of secondary seismic elements are given in **5.7**.

(3) Resistances or stabilising effects not explicitly taken into account in calculations may enhance both strength and energy dissipation (e.g. membrane reactions of slabs mobilised by upward deflections of structural walls).

(4) Non-structural elements may also contribute to energy dissipation, if they are uniformly distributed throughout the structure. Measures should be taken against possible local adverse effects due to the interaction between structural and nonstructural elements (see **5.9**).

(5) For masonry infilled frames (which are a common case of non-structural elements) special rules are given in **4.3.6** and **5.9**.

5.2.3.7 Specific additional measures

(1)P Due to the random nature of the seismic action and the uncertainties of the post-elastic cyclic behaviour of concrete structures, the overall uncertainty is substantially higher than with non-seismic actions. Therefore, measures shall be taken to reduce uncertainties related to the structural configuration, to the analysis, to the resistance and to the ductility.

(2)P Important resistance uncertainties may be produced by geometric errors. To minimize this type of uncertainty, the following rules shall be applied.

a) Certain minimum dimensions of the structural elements shall be respected (see **5.4.1.2** and **5.5.1.2**) to decrease the sensitivity to geometric errors.

b) The ratio of the minimum to the maximum dimension of linear elements shall be limited, to minimize the risk of lateral instability of these elements (see **5.4.1.2** and **5.5.1.2.1(2)**P).

c) Storey drifts shall be limited, to limit P-Δ effects in the columns (see **4.4.2.2(2)-(4)**).

d) A substantial percentage of the top reinforcement of beams at their end cross-sections shall continue along the entire length of the beam (see **5.4.3.1.2(5)**P, **5.5.3.1.3(5)**P) to account for the uncertainty in the location of the inflection point.

e) Account shall be taken of reversals of moments not predicted by the analysis by providing minimum reinforcement at the relevant side of beams (see **5.5.3.1.3**).

(3)P To minimize ductility uncertainties, the following rules shall be observed.

a) A minimum of local ductility shall be provided in all primary seismic elements, independently of the ductility class adopted in the design (see **5.4** and **5.5**).

b) A minimum amount of tension reinforcement shall be provided, to avoid brittle failure upon cracking (see **5.4.3** and **5.5.5**).

c) An appropriate limit of the normalised design axial force shall be respected (see **5.4.3.2.1(3)**P, **5.4.3.4.1(2)**, **5.5.3.2.1(3)**P and **5.5.3.4.1(2)**) to reduce the consequences of cover spalling and to avoid the large uncertainties in the available ductility at high levels of applied axial force.

5.2.4 Safety verifications

(1)P For ultimate limit state verifications the partial factors for material properties γ_c and γ_s shall take into account the possible strength degradation of the materials due to cyclic deformations.

(2) If more specific data are not available, the values of the partial factors γ_c and γ_s adopted for the persistent and transient design situations should be applied, assuming that due to the local ductility provisions the ratio between the residual strength after degradation and the initial one is roughly equal to the ratio between the γ_M values for accidental and fundamental load combinations.

(3) If the strength degradation is appropriately accounted for in the evaluation of the material properties, the γ_M values adopted for the accidental design situation may be used.

NOTE 1 The values ascribed to the material partial factors γ_c and γ_s for the persistent and transient design situations and the accidental design situations for use in a country may be found in its National Annex to EN 1992-1-1:2004.

NOTE 2 The National Annex may specify whether the γ_M values to be used for earthquake resistant design are those for the persistent and transient or for the accidental design situations. Intermediate values may even be chosen in the National Annex, depending on how the material properties under earthquake loading are evaluated. The recommended choice is that of **(2)** in this subclause, which allows the same value of the design resistance to be used for the persistent and transient design situations (e.g. gravity loads with wind) and for the seismic design situation.

5.3 Design to EN 1992-1-1

5.3.1 General

(1) Seismic design for low ductility (ductility class L), following EN 1992-1-1:2004 without any additional requirements other than those of **5.3.2**, is recommended only for low seismicity cases (see **3.2.1(4)**).

Sofort-Download-Beuth-Book Supply Bureau-KdNr.7066075-ID.SCBLGSA1OBPULJD3QN0TD2AJ.1-2016-08-02 13:22:06

SUPPLIED BY BSB EDGE UNDER LICENCE FROM DIN FOR RAJARAMBAPU INSTITUTE OF TECHNOLOGY - SANGLI DIST. VIDE BSB EDGE ORDER REGISTRATION NO. ORD01-1088 ON 02/08/2016

SUPPLIED BY BSB EDGE UNDER LICENCE FROM DIN FOR RAJARAMBAPU INSTITUTE OF TECHNOLOGY - SANGLI DIST. VIDE BSB EDGE ORDER REGISTRATION NO. ORD01-1088 ON 02/08/2016

Sofort-Download-Beuth-Book Supply Bureau-KdNr.7066075-ID.SCBLGSA1OBPULJD3QN0TD2AJ.1-2016-08-02 13:22:06

5.3.2 Materials

(1)P In primary seismic elements (see **4.2.2**), reinforcing steel of class B or C in EN 1992-1-1:2004, Table C.1 shall be used.

5.3.3 Behaviour factor

(1) A behaviour factor q of up to 1,5 may be used in deriving the seismic actions, regardless of the structural system and the regularity in elevation.

5.4 Design for DCM

5.4.1 Geometrical constraints and materials

5.4.1.1 Material requirements

(1)P Concrete of a class lower than C 16/20 shall not be used in primary seismic elements.

(2)P With the exceptions of closed stirrups and cross-ties, only ribbed bars shall be used as reinforcing steel in critical regions of primary seismic elements.

(3)P In critical regions of primary seismic elements reinforcing steel of class B or C in EN 1992-1-1:2004, Table C.1 shall be used.

(4)P Welded wire meshes may be used, if they meet the requirements in **(2)**P and **(3)**P of this subclause.

5.4.1.2 Geometrical constraints

5.4.1.2.1 Beams

(1)P The eccentricity of the beam axis relative to that of the column into which it frames shall be limited, to enable efficient transfer of cyclic moments from a primary seismic beam to a column to be achieved.

(2) To enable the requirement specified in **(1)**P to be met the distance between the centroidal axes of the two members should be limited to less than $b_c/4$, where b_c is the largest cross-sectional dimension of the column normal to the longitudinal axis of the beam.

(3)P To take advantage of the favourable effect of column compression on the bond of horizontal bars passing through the joint, the width b_w of a primary seismic beam shall satisfy the following expression:

$$b_w \leq \min\{b_c + h_w ; 2b_c\} \tag{5.6}$$

where h_w is the depth of the beam and b_c is as defined in **(2)** of this subclause.

SUPPLIED BY BSB EDGE UNDER LICENCE FROM DIN FOR RAJARAMBAPU INSTITUTE OF TECHNOLOGY - SANGLI DIST. VIDE BSB EDGE ORDER REGISTRATION NO. ORD01-1088 ON 02/08/2016

Sofort-Download-Beuth-Book Supply Bureau-KdNr.7066075-ID.SCBLGSA1OBPULJD3QN0TD2AJ.1-2016-08-02 13:22:06

5.4.1.2.2 Columns

(1) Unless $\theta \leq 0{,}1$ (see **4.4.2.2(2)**), the cross-sectional dimensions of primary seismic columns should not be smaller than one tenth of the larger distance between the point of contraflexure and the ends of the column, for bending within a plane parallel to the column dimension considered.

5.4.1.2.3 Ductile Walls

(1) The thickness of the web, $b_{wo,}$ (in metres) should satisfy the following expression:

$$b_{wo} \geq \max\{0{,}15,\ h_s/20\} \tag{5.7}$$

where h_s is the clear storey height in metres.

(2) Additional requirements apply with respect to the thickness of the confined boundary elements of walls, as specified in **5.4.3.4.2(10)**

5.4.1.2.4 Large lightly reinforced walls

(1) The provision in **5.4.1.2.3(1)** applies also to large lightly reinforced walls.

5.4.1.2.5 Specific rules for beams supporting discontinued vertical elements

(1)P Structural walls shall not rely for their support on beams or slabs.

(2)P For a primary seismic beam supporting columns discontinued below the beam, the following rules apply:

a) there shall be no eccentricity of the column axis relative to that of the beam;

b) the beam shall be supported by at least two direct supports, such as walls or columns.

5.4.2 Design action effects

5.4.2.1 General

(1)P With the exception of ductile primary seismic walls, for which the special provisions of **5.4.2.4** apply, the design values of bending moments and axial forces shall be obtained from the analysis of the structure for the seismic design situation in accordance with EN 1990:2001 **6.4.3.4**, taking into account second order effects in accordance with **4.4.2.2** and the capacity design requirements of **5.2.3.3(2)**. Redistribution of bending moments in accordance with EN 1992-1-1 is permitted. The design values of shear forces of primary seismic beams, columns, ductile walls and lightly reinforced walls, are determined in accordance with **5.4.2.2**, **5.4.2.3**, **5.4.2.4** and **5.4.2.5**, respectively.

5.4.2.2 Beams

(1)P In primary seismic beams the design shear forces shall be determined in accordance with the capacity design rule, on the basis of the equilibrium of the beam

under: a) the transverse load acting on it in the seismic design situation and b) end moments $M_{i,d}$ (with i=1,2 denoting the end sections of the beam), corresponding to plastic hinge formation for positive and negative directions of seismic loading. The plastic hinges should be taken to form at the ends of the beams or (if they form there first) in the vertical elements connected to the joints into which the beam ends frame (see Figure 5.1).

(2) Paragraph **(1)**P of this subclause should be implemented as follows.

a) At end section i, two values of the acting shear force should be calculated, i.e. the maximum $V_{Ed,max,i}$ and the minimum $V_{Ed,min,i}$ corresponding to the maximum positive and the maximum negative end moments $M_{i,d}$ that can develop at ends 1 and 2 of the beam.

b) End moments $M_{i,d}$ in **(1)**P and in **(2)** a) of this subclause may be determined as follows:

$$M_{i,d} = \gamma_{Rd} M_{Rb,i} \min(1, \frac{\sum M_{Rc}}{\sum M_{Rb}}) \tag{5.8}$$

where

γ_{Rd} is the factor accounting for possible overstrength due to steel strain hardening, which in the case of DCM beams may be taken as being equal to 1,0;

$M_{Rb,i}$ is the design value of the beam moment of resistance at end i in the sense of the seismic bending moment under the considered sense of the seismic action;

ΣM_{Rc} and ΣM_{Rb} are the sum of the design values of the moments of resistance of the columns and the sum of the design values of the moments of resistance of the beams framing into the joint, respectively (see **4.4.2.3(4)**). The value of ΣM_{Rc} should correspond to the column axial force(s) in the seismic design situation for the considered sense of the seismic action.

c) At a beam end where the beam is supported indirectly by another beam, instead of framing into a vertical member, the beam end moment $M_{i,d}$ there may be taken as being equal to the acting moment at the beam end section in the seismic design situation.

AC

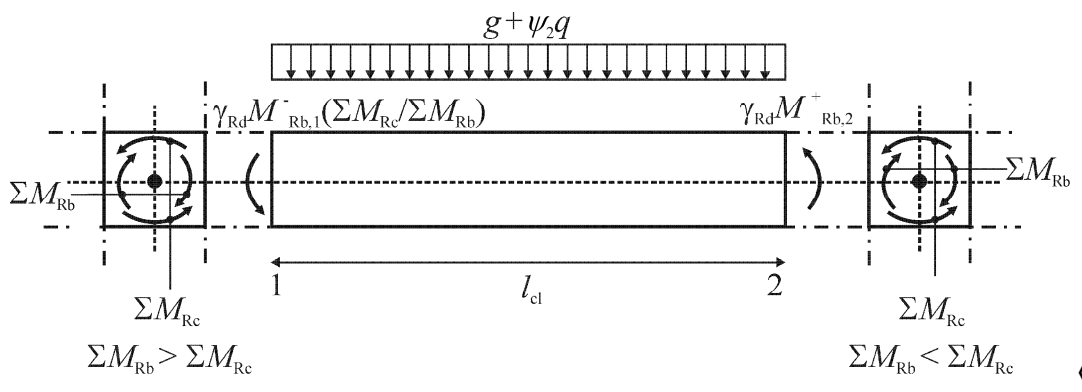

AC

Figure 5.1: Capacity design values of shear forces on beams

Sofort-Download-Beuth-Book Supply Bureau-KdNr.7066075-ID.SCBLGSA1OBPULJD3QN0TD2AJ.1-2016-08-02 13:22:06

SUPPLIED BY BSB EDGE UNDER LICENCE FROM DIN FOR RAJARAMBAPU INSTITUTE OF TECHNOLOGY - SANGLI DIST. VIDE BSB EDGE ORDER REGISTRATION NO. ORD01-1088 ON 02/08/2016

SUPPLIED BY BSB EDGE UNDER LICENCE FROM DIN FOR RAJARAMBAPU INSTITUTE OF TECHNOLOGY - SANGLI DIST. VIDE BSB EDGE ORDER REGISTRATION NO. ORD01-1088 ON 02/08/2016

Sofort-Download-Beuth-Book Supply Bureau-KdNr.7066075-ID.SCBLGSA1OBPULJD3QN0TD2AJ.1-2016-08-02 13:22:06

5.4.2.3 Columns

(1)P In primary seismic columns the design values of shear forces shall be determined in accordance with the capacity design rule, on the basis of the equilibrium of the column under end moments $M_{i,d}$ (with i=1,2 denoting the end sections of the column), corresponding to plastic hinge formation for positive and negative directions of seismic loading. The plastic hinges should be taken to form at the ends of the beams connected to the joints into which the column end frames, or (if they form there first) at the ends of the columns (see Figure 5.2).

(2) End moments $M_{i,d}$ in **(1)**P of this subclause may be determined from the following expression:

$$M_{i,d} = \gamma_{Rd} M_{Rc,i} \min\left(1, \frac{\sum M_{Rb}}{\sum M_{Rc}}\right) \tag{5.9}$$

where

γ_{Rd} is the factor accounting for overstrength due to steel strain hardening and confinement of the concrete of the compression zone of the section, taken as being equal to 1,1;

$M_{Rc,i}$ is the design value of the column moment of resistance at end i in the sense of the seismic bending moment under the considered sense of the seismic action;

ΣM_{Rc} and ΣM_{Rb} are as defined in **5.4.2.2(2)**.

(3) The values of $M_{Rc,i}$ and ΣM_{Rc} should correspond to the column axial force(s) in the seismic design situation for the considered sense of the seismic action.

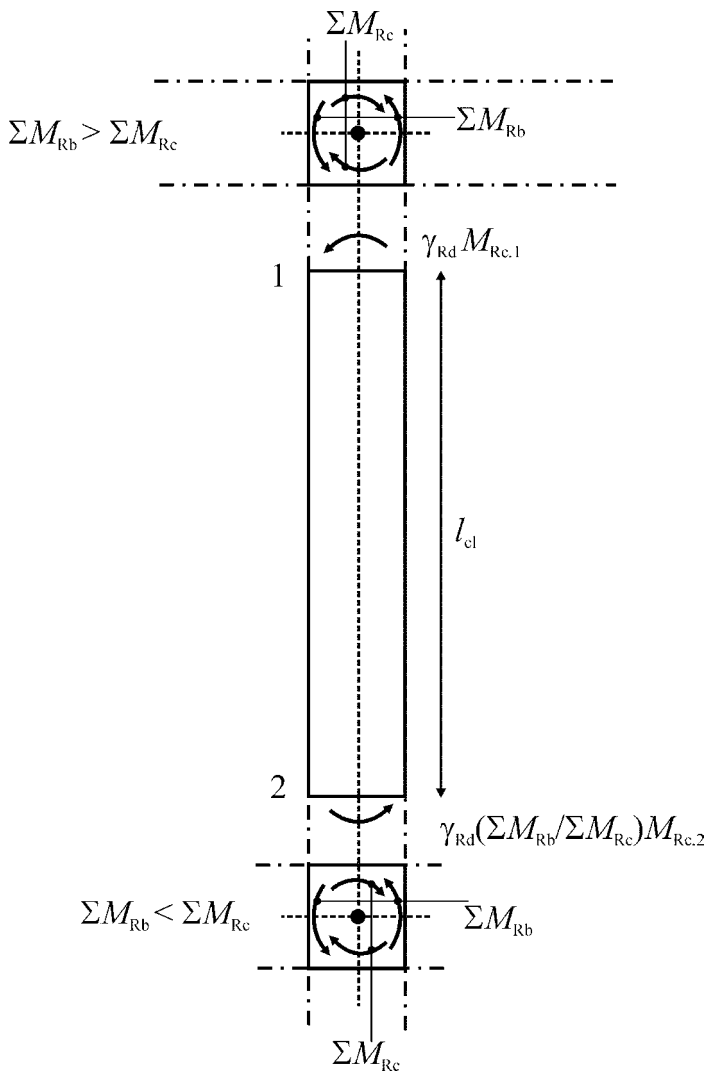

Figure 5.2: Capacity design shear force in columns

5.4.2.4 Special provisions for ductile walls

(1)P Uncertainties in the analysis and post-elastic dynamic effects shall be taken into account, at least through an appropriate simplified method. If a more precise method is not available, the rules in the following clauses for the design envelopes for bending moments, as well as the magnification factors for shear forces, may be used.

(2) Redistribution of seismic action effects between primary seismic walls of up to 30% is allowed, provided that the total resistance demand is not reduced. Shear forces should be redistributed along with the bending moments, so that in the individual walls the ratio of bending moments to shear forces is not appreciably affected. In walls subjected to large fluctuations of axial force, as e.g. in coupled walls, moments and shears should be redistributed from the wall(s) which are under low compression or under net tension, to those which are under high axial compression.

(3) In coupled walls redistribution of seismic action effects between coupling beams of different storeys of up to 20% is allowed, provided that the seismic axial force at the

Sofort-Download-Beuth-Book Supply Bureau-KdNr.7066075-ID.SCBLGSA1OBPULJD3QN0TD2AJ.1-2016-08-02 13:22:06

SUPPLIED BY BSB EDGE UNDER LICENCE FROM DIN FOR RAJARAMBAPU INSTITUTE OF TECHNOLOGY - SANGLI DIST. VIDE BSB EDGE ORDER REGISTRATION NO. ORD01-1088 ON 02/08/2016

base of each individual wall (the resultant of the shear forces in the coupling beams) is not affected.

(4)P Uncertainties regarding the moment distribution along the height of slender primary seismic walls (with height to length ratio h_w/l_w greater than 2,0) shall be covered.

(5) The requirement specified in **(4)**P of this subclause may be satisfied by applying, irrespective of the type of analysis used, the following simplified procedure.

The design bending moment diagram along the height of the wall should be given by an envelope of the bending moment diagram from the analysis, vertically displaced (tension shift). The envelope may be assumed linear, if the structure does not exhibit significant discontinuities of mass, stiffness or resistance over its height (see Figure 5.3). The tension shift should be consistent with the strut inclination taken in the ULS verification for shear, with a possible fan-type pattern of struts near the base, and with the floors acting as ties.

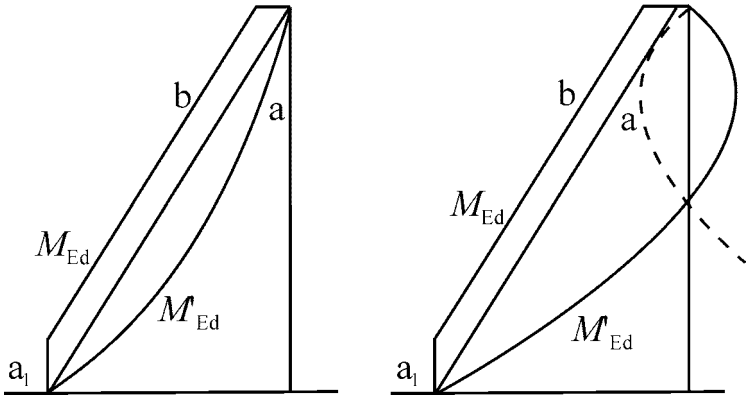

Key

a moment diagram from analysis

b design envelope

a_l tension shift

Figure 5.3: Design envelope for bending moments in slender walls (left: wall systems; right: dual systems).

(6)P The possible increase in shear forces after yielding at the base of a primary seismic wall, shall be taken into account.

(7) The requirement specified in **(6)**P of this subclause may be satisfied if the design shear forces are taken as being 50% higher than the shear forces obtained from the analysis.

(8) In dual systems containing slender walls the design envelope of shear forces in accordance with Figure 5.4 should be used, to account for uncertainties in higher mode effects.

Sofort-Download-Beuth-Book Supply Bureau-KdNr.7066075-ID.SCBLGSA1OBPULJD3QN0TD2AJ.1-2016-08-02 13:22:06

SUPPLIED BY BSB EDGE UNDER LICENCE FROM DIN FOR RAJARAMBAPU INSTITUTE OF TECHNOLOGY - SANGLI DIST. VIDE BSB EDGE ORDER REGISTRATION NO. ORD01-1088 ON 02/08/2016

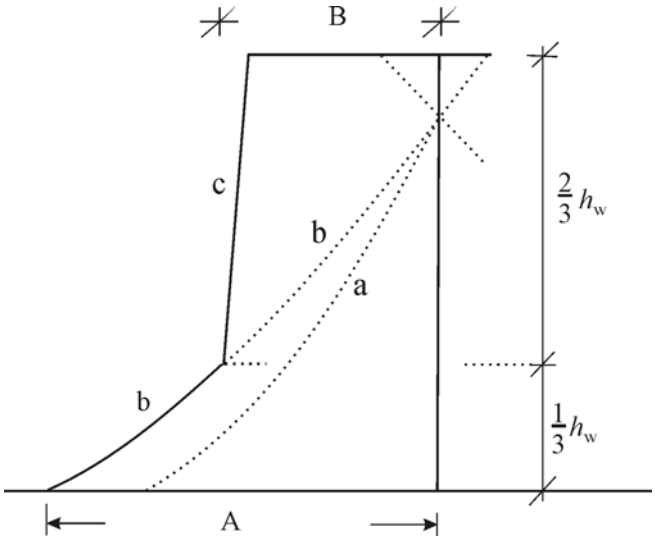

Key

a shear diagram from analysis

b magnified shear diagram

c design envelope

A $V_{wall,base}$

B $V_{wall,top} \geq V_{wall,base}/2$

Figure 5.4: Design envelope of the shear forces in the walls of a dual system.

5.4.2.5 Special provisions for large lightly reinforced walls

(1)P To ensure that flexural yielding precedes attainment of the ULS in shear, the shear force V'_{Ed} from the analysis shall be increased.

(2) The requirement in **(1)**P of this subclause is considered to be satisfied if at every storey of the wall the design shear force V_{Ed} is obtained from the shear force calculated from the analysis, V'_{Ed}, in accordance with the following expression:

$$V_{Ed} = V'_{Ed} \frac{q+1}{2} \tag{5.10}$$

(3)P The additional dynamic axial forces developed in large walls due to uplifting from the soil, or due to the opening and closing of horizontal cracks, shall be taken into account in the ULS verification of the wall for flexure with axial force.

(4) Unless the results of a more precise calculation are available, the dynamic component of the wall axial force in **(3)**P of this subclause may be taken as being 50% of the axial force in the wall due to the gravity loads present in the seismic design situation. This force should be taken to have a plus or a minus sign, whichever is most unfavourable.

(5) If the value of the behaviour factor q does not exceed 2,0, the effect of the dynamic axial force in **(3)** and **(4)** of this subclause may be neglected.

Sofort-Download-Beuth-Book Supply Bureau-KdNr.7066075-ID.SCBLGSA1OBPULJD3QN0TD2AJ.1-2016-08-02 13:22:06

SUPPLIED BY BSB EDGE UNDER LICENCE FROM DIN FOR RAJARAMBAPU INSTITUTE OF TECHNOLOGY - SANGLI DIST. VIDE BSB EDGE ORDER REGISTRATION NO. ORD01-1088 ON 02/08/2016

5.4.3 ULS verifications and detailing

5.4.3.1 Beams

5.4.3.1.1 Resistance in bending and shear

(1) The bending and shear resistances should be computed in accordance with EN 1992-1-1:2004.

(2) The top-reinforcement of the end cross-sections of primary seismic beams with a T- or L-shaped section should be placed mainly within the width of the web. Only part of this reinforcement may be placed outside the width of the web, but within the effective flange width b_{eff}.

(3) The effective flange width b_{eff} may be assumed to be as follows:

a) for primary seismic beams framing into exterior columns, the effective flange width b_{eff} is taken, in the absence of a transverse beam, as being equal to the width b_c of the column (Figure 5.5b), or, if there is a transverse beam of similar depth, equal to this width increased by $2h_f$ on each side of the beam (Figure 5.5a);

b) for primary seismic beams framing into interior columns the above widths may be increased by $2h_f$ on each side of the beam (Figure 5.5c and d).

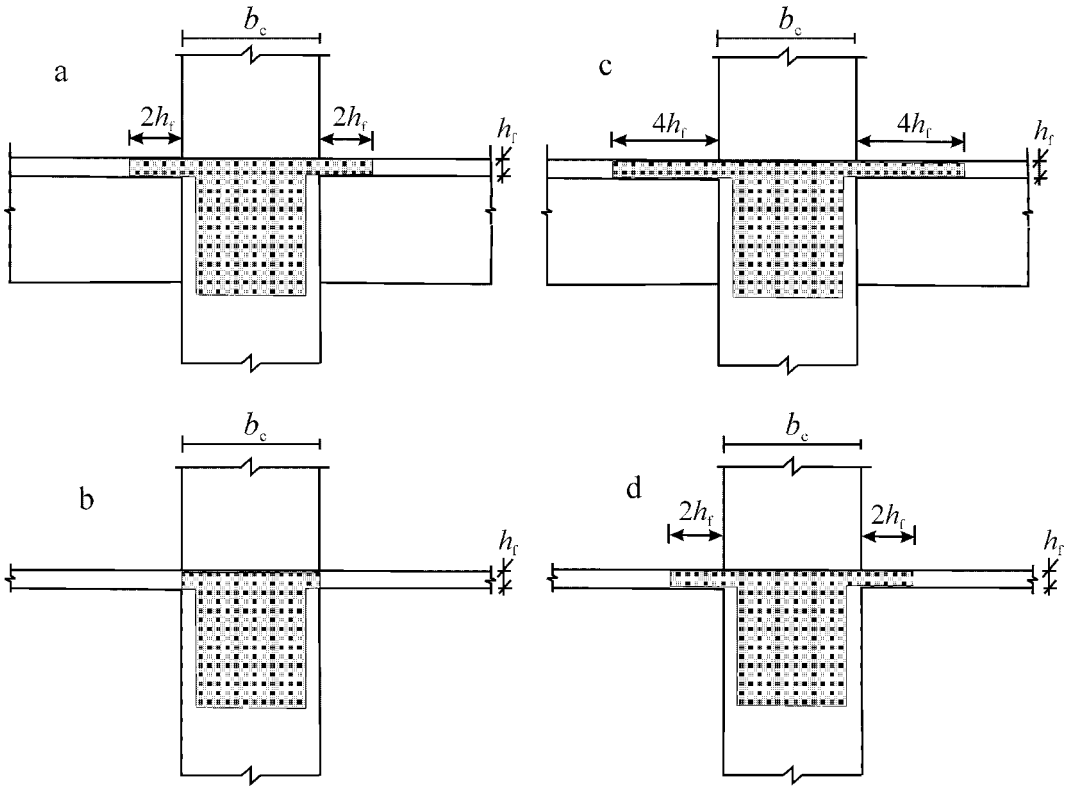

Figure 5.5: Effective flange width b_{eff} for beams framing into columns

Sofort-Download-Beuth-Book Supply Bureau-KdNr.7066075-ID.SCBLGSA1OBPULJD3QN0TD2AJ.1-2016-08-02 13:22:06

SUPPLIED BY BSB EDGE UNDER LICENCE FROM DIN FOR RAJARAMBAPU INSTITUTE OF TECHNOLOGY - SANGLI DIST. VIDE BSB EDGE ORDER REGISTRATION NO. ORD01-1088 ON 02/08/2016

SUPPLIED BY BSB EDGE UNDER LICENCE FROM DIN FOR RAJARAMBAPU INSTITUTE OF TECHNOLOGY - SANGLI DIST. VIDE BSB EDGE ORDER REGISTRATION NO. ORD01-1088 ON 02/08/2016

Sofort-Download-Beuth-Book Supply Bureau-KdNr.7066075-ID.SCBLGSA1OBPULJD3QN0TD2AJ.1-2016-08-02 13:22:06

5.4.3.1.2 Detailing for local ductility

(1)P The regions of a primary seismic beam up to a distance $l_{cr} = h_w$ (where h_w denotes the depth of the beam) from an end cross-section where the beam frames into a beam-column joint, as well as from both sides of any other cross-section liable to yield in the seismic design situation, shall be considered as being critical regions.

(2) In primary seismic beams supporting discontinued (cut-off) vertical elements, the regions up to a distance of $2h_w$ on each side of the supported vertical element should be considered as being critical regions.

(3)P To satisfy the local ductility requirement in the critical regions of primary seismic beams, the value of the curvature ductility factor μ_ϕ shall be at least equal to the value given in **5.2.3.4(3)**.

(4) The requirement specified in **(3)**P of this subclause is deemed to be satisfied, if the following conditions are met at both flanges of the beam.

a) at the compression zone reinforcement of not less than half of the reinforcement provided at the tension zone is placed, in addition to any compression reinforcement needed for the ULS verification of the beam in the seismic design situation.

b) The reinforcement ratio of the tension zone ρ does not exceed a value ρ_{max} equal to:

$$\rho_{max} = \rho' + \frac{0{,}0018}{\mu_\varphi \varepsilon_{sy,d}} \cdot \frac{f_{cd}}{f_{yd}} \tag{5.11}$$

with the reinforcement ratios of the tension zone and compression zone, ρ and ρ', both normalised to bd, where b is the width of the compression flange of the beam. If the tension zone includes a slab, the amount of slab reinforcement parallel to the beam within the effective flange width defined in **5.4.3.1.1(3)** is included in ρ.

(5)P Along the entire length of a primary seismic beam, the reinforcement ratio of the tension zone, ρ, shall be not less than the following minimum value ρ_{min}:

$$\rho_{min} = 0{,}5\left(\frac{f_{ctm}}{f_{yk}}\right) \tag{5.12}$$

(6)P Within the critical regions of primary seismic beams, hoops satisfying the following conditions shall be provided:

a) The diameter d_{bw} of the hoops (in millimetres) shall be not less than 6.

b) The spacing, s, of hoops (in millimetres) shall not exceed:

$$s = \min\{h_w/4;\ 24d_{bw};\ 225;\ 8d_{bL}\} \tag{5.13}$$

where

d_{bL} is the minimum longitudinal bar diameter (in millimetres); and

h_w the beam depth (in millimetres).

c) The first hoop shall be placed not more than 50 mm from the beam end section (see Figure 5.6).

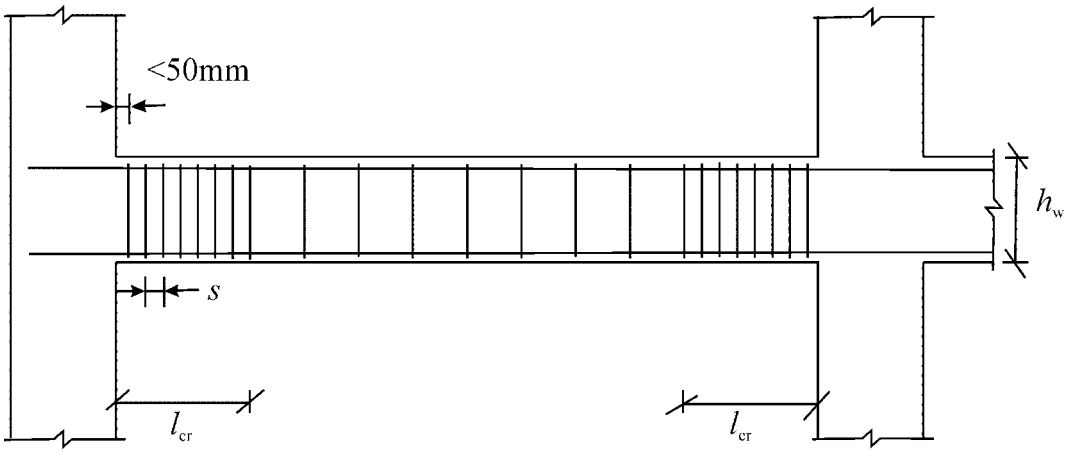

Figure 5.6: Transverse reinforcement in critical regions of beams

5.4.3.2 Columns

5.4.3.2.1 Resistances

(1)P Flexural and shear resistance shall be computed in accordance with EN 1992-1-1:2004, using the value of the axial force from the analysis in the seismic design situation.

(2) Biaxial bending may be taken into account in a simplified way by carrying out the verification separately in each direction, with the uniaxial moment of resistance reduced by 30%.

(3)P In primary seismic columns the value of the normalised axial force ν_d shall not exceed 0,65.

5.4.3.2.2 Detailing of primary seismic columns for local ductility

(1)P The total longitudinal reinforcement ratio ρ_l shall be not less than 0,01 and not more than 0,04. In symmetrical cross-sections symmetrical reinforcement should be provided ($\rho = \rho'$).

(2)P At least one intermediate bar shall be provided between corner bars along each column side, to ensure the integrity of the beam-column joints.

(3)P The regions up to a distance l_{cr} from both end sections of a primary seismic column shall be considered as being critical regions.

(4) In the absence of more precise information, the length of the critical region l_{cr} (in metres) may be computed from the following expression:

$$l_{cr} = \max\{h_c;\ l_{cl}/6;\ 0{,}45\} \tag{5.14}$$

Sofort-Download-Beuth-Book Supply Bureau-KdNr.7066075-ID.SCBLGSA1OBPULJD3QN0TD2AJ.1-2016-08-02 13:22:06

SUPPLIED BY BSB EDGE UNDER LICENCE FROM DIN FOR RAJARAMBAPU INSTITUTE OF TECHNOLOGY - SANGLI DIST. VIDE BSB EDGE ORDER REGISTRATION NO. ORD01-1088 ON 02/08/2016

where

h_c is the largest cross-sectional dimension of the column (in metres); and

l_{cl} is the clear length of the column (in metres).

(5)P If $l_c/h_c<3$, the entire height of the primary seismic column shall be considered as being a critical region and shall be reinforced accordingly.

(6)P In the critical region at the base of primary seismic columns a value of the curvature ductility factor, μ_ϕ, should be provided, at least equal to that given in **5.2.3.4(3)**.

(7)P If for the specified value of μ_ϕ a concrete strain larger than ε_{cu2}=0,0035 is needed anywhere in the cross-section, compensation for the loss of resistance due to spalling of the concrete shall be achieved by means of adequate confinement of the concrete core, on the basis of the properties of confined concrete in EN 1992-1-1:2004, **3.1.9**.

(8) The requirements specified in **(6)**P and **(7)**P of this subclause are deemed to be satisfied if:

$$\alpha\omega_{wd} \geq 30\mu_\varphi \nu_d \cdot \varepsilon_{sy,d} \cdot \frac{b_c}{b_o} - 0{,}035 \tag{5.15}$$

where

ω_{wd} is the mechanical volumetric ratio of confining hoops within the critical regions

$$\left[\omega_{wd} = \frac{\text{volume of confining hoops}}{\text{volume of concrete core}} \cdot \frac{f_{yd}}{f_{cd}}\right];$$

μ_ϕ is the required value of the curvature ductility factor;

ν_d is the normalised design axial force ($\nu_d = N_{Ed}/A_c{\cdot}f_{cd}$);

$\varepsilon_{sy,d}$ is the design value of tension steel strain at yield;

h_c is the gross cross-sectional depth (parallel to the horizontal direction in which the value of μ_ϕ used in **(6)**P of this subclause applies);

h_o is the depth of confined core (to the centreline of the hoops);

b_c is the gross cross-sectional width;

b_o is the width of confined core (to the centreline of the hoops);

α is the confinement effectiveness factor, equal to $\alpha=\alpha_n{\cdot}\alpha_s$, with:

a) For rectangular cross-sections:

$$\alpha_n = 1 - \sum_n b_i^2 / 6b_o h_o \tag{5.16a}$$

$$\alpha_s = (1 - s/2b_o)(1 - s/2h_o) \tag{5.17a}$$

where

Sofort-Download-Beuth-Book Supply Bureau-KdNr.7066075-ID.SCBLGSA1OBPULJD3QN0TD2AJ.1-2016-08-02 13:22:06

SUPPLIED BY BSB EDGE UNDER LICENCE FROM DIN FOR RAJARAMBAPU INSTITUTE OF TECHNOLOGY - SANGLI DIST. VIDE BSB EDGE ORDER REGISTRATION NO. ORD01-1088 ON 02/08/2016

n is the total number of longitudinal bars laterally engaged by hoops or cross ties; and

b_i is the distance between consecutive engaged bars (see Figure 5.7; also for b_o, h_o, s).

b) For circular cross-sections with circular hoops and diameter of confined core D_o (to the centreline of hoops):

$$\alpha_n = 1 \tag{5.16b}$$

$$\alpha_s = (1 - s / 2D_o)^2 \tag{5.17b}$$

c) For circular cross-sections with spiral hoops:

$$\alpha_n = 1 \tag{5.16c}$$

$$\alpha_s = (1 - s / 2D_o) \tag{5.17c}$$

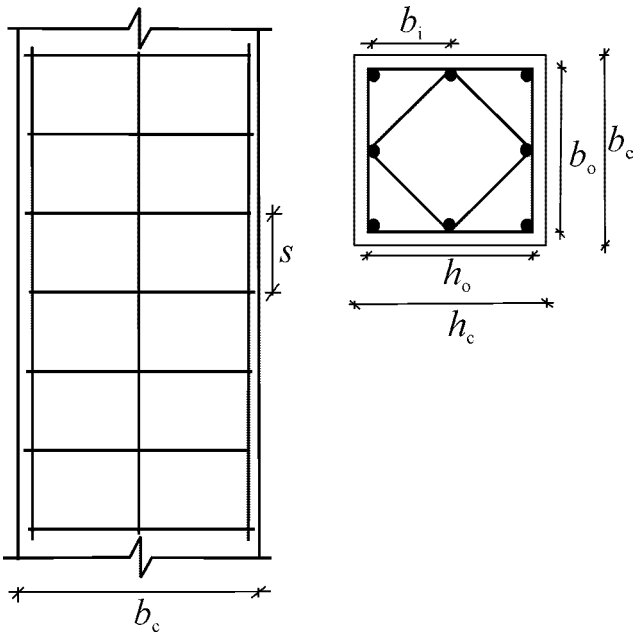

Figure 5.7: Confinement of concrete core

(9) A minimum value of ω_{wd} equal to 0,08 should be provided within the critical region at the base of the primary seismic columns.

(10)P Within the critical regions of the primary seismic columns, hoops and cross-ties, of at least 6 mm in diameter, shall be provided at a spacing such that a minimum ductility is ensured and local buckling of longitudinal bars is prevented. The hoop pattern shall be such that the cross-section benefits from the triaxial stress conditions produced by the hoops.

(11) The minimum conditions of **(10)**P of this subclause are deemed to be satisfied if the following conditions are met.

Sofort-Download-Beuth-Book Supply Bureau-KdNr.7066075-ID.SCBLGSA1OBPULJD3QN0TD2AJ.1-2016-08-02 13:22:06

SUPPLIED BY BSB EDGE UNDER LICENCE FROM DIN FOR RAJARAMBAPU INSTITUTE OF TECHNOLOGY - SANGLI DIST. VIDE BSB EDGE ORDER REGISTRATION NO. ORD01-1088 ON 02/08/2016

a) The spacing, s, of the hoops (in millimetres) does not exceed:

$$s = \min\{b_o/2;\ 175;\ 8d_{bL}\} \tag{5.18}$$

where

b_o (in millimetres) is the minimum dimension of the concrete core (to the centreline of the hoops); and

d_{bL} is the minimum diameter of the longitudinal bars (in millimetres).

b) The distance between consecutive longitudinal bars engaged by hoops or cross-ties does not exceed 200 mm, taking into account EN 1992-1-1:2004, **9.5.3(6)**.

(12)P The transverse reinforcement within the critical region at the base of the primary seismic columns may be determined as specified in EN 1992-1-1:2004, provided that the value of the normalised axial load in the seismic design situation is less than 0,2 and the value of the behaviour factor q used in the design does not exceed 2,0.

5.4.3.3 Beam-column joints

(1) The horizontal confinement reinforcement in joints of primary seismic beams with columns should be not less than that specified in **5.4.3.2.2(8)-(11)** for the critical regions of columns, with the exception of the case listed in the following paragraph.

(2) If beams frame into all four sides of the joint and their width is at least three-quarters of the parallel cross-sectional dimension of the column, the spacing of the horizontal confinement reinforcement in the joint may be increased to twice that specified in **(1)** of this subclause, but may not exceed 150 mm.

(3)P At least one intermediate (between column corner bars) vertical bar shall be provided at each side of a joint of primary seismic beams and columns.

5.4.3.4 Ductile Walls

5.4.3.4.1 Bending and shear resistance

(1)P Flexural and shear resistances shall be computed in accordance with EN 1992-1-1:2004, unless specified otherwise in the following paragraphs, using the value of the axial force resulting from the analysis in the seismic design situation.

(2) In primary seismic walls the value of the normalised axial load ν_d should not exceed 0,4.

(3)P Vertical web reinforcement shall be taken into account in the calculation of the flexural resistance of wall sections.

(4) Composite wall sections consisting of connected or intersecting rectangular segments (L-, T-, U-, I- or similar sections) should be taken as integral units, consisting of a web or webs parallel or approximately parallel to the direction of the acting seismic shear force and a flange or flanges normal or approximately normal to it. For the calculation of flexural resistance, the effective flange width on each side of a web should be taken to extend from the face of the web by the minimum of:

Sofort-Download-Beuth-Book Supply Bureau-KdNr.7066075-ID.SCBLGSA1OBPULJD3QN0TD2AJ.1-2016-08-02 13:22:06

SUPPLIED BY BSB EDGE UNDER LICENCE FROM DIN FOR RAJARAMBAPU INSTITUTE OF TECHNOLOGY - SANGLI DIST. VIDE BSB EDGE ORDER REGISTRATION NO. ORD01-1088 ON 02/08/2016

a) the actual flange width;

b) one-half of the distance to an adjacent web of the wall; and

c) 25% of the total height of the wall above the level considered.

5.4.3.4.2 Detailing for local ductility

(1) The height of the critical region h_{cr} above the base of the wall may be estimated as:

$$h_{cr} = \max\left[l_{w,}\ h_w / 6\right] \tag{5.19a}$$

but

$$h_{cr} \le \begin{cases} 2 \cdot l_w \\ \begin{cases} h_s & \text{for n} \le 6 \text{ storeys} \\ 2 \cdot h_s & \text{for n} \ge 7 \text{ storeys} \end{cases} \end{cases} \tag{5.19b}$$

where h_s is the clear storey height and where the base is defined as the level of the foundation or the top of basement storeys with rigid diaphragms and perimeter walls.

(2) At the critical regions of walls a value μ_ϕ of the curvature ductility factor should be provided, that is at least equal to that calculated from expressions (5.4), (5.5) in **5.2.3.4(3)** with the basic value of the behaviour factor q_o in these expressions replaced by the product of q_o times the maximum value of the ratio M_{Ed}/M_{Rd} at the base of the wall in the seismic design situation, where M_{Ed} is the design bending moment from the analysis; and M_{Rd} is the design flexural resistance.

(3) Unless a more precise method is used, the value of μ_ϕ specified in **(2)** of this subclause may be supplied by means of confining reinforcement within edge regions of the cross-section, termed boundary elements, the extent of which should be determined in accordance with **(6)** of this subclause. The amount of confining reinforcement should be determined in accordance with **(4)** and **(5)** of this subclause:

(4) For walls of rectangular cross-section, the mechanical volumetric ratio of the required confining reinforcement ω_{wd} in boundary elements should satisfy the following expression, with the -values of μ_ϕ as specified in **(2)** of this subclause:

$$\alpha\omega_{wd} \ge 30\mu_\varphi\left(\nu_d + \omega_\nu\right)\varepsilon_{sy,d}\frac{b_c}{b_o} - 0{,}035 \tag{5.20}$$

where the parameters are defined in **5.4.3.2.2(8)**, except ω_ν, which is the mechanical ratio of vertical web reinforcement ($\omega_\nu = \rho_\nu f_{yd,\nu}/f_{cd}$).

(5) For walls with barbells or flanges, or with a section consisting of several rectangular parts (T-, L-, I-, U-shaped sections, etc.) the mechanical volumetric ratio of the confining reinforcement in the boundary elements may be determined as follows:

Sofort-Download-Beuth-Book Supply Bureau-KdNr.7066075-ID.SCBLGSA1OBPULJD3QN0TD2AJ.1-2016-08-02 13:22:06

SUPPLIED BY BSB EDGE UNDER LICENCE FROM DIN FOR RAJARAMBAPU INSTITUTE OF TECHNOLOGY - SANGLI DIST. VIDE BSB EDGE ORDER REGISTRATION NO. ORD01-1088 ON 02/08/2016

a) The axial force, N_{Ed}, and the total area of the vertical reinforcement in the web, A_{sv}, shall be normalised to $h_c b_c f_{cd}$, with the width of the barbell or flange in compression taken as the cross-sectional width b_c ($\nu_d = N_{Ed} / h_c b_c f_{cd}$, $\omega_v = (A_{sv}/h_c b_c) f_{yd} / f_{cd}$). The neutral axis depth x_u at ultimate curvature after spalling of the concrete outside the confined core of the boundary elements may be estimated as:

$$x_u = (\nu_d + \omega_\nu)\frac{l_w b_c}{b_o} \tag{5.21}$$

where b_o is the width of the confined core in the barbell or flange. If the value of x_u from expression (5.21) does not exceed the depth of the barbell or flange after spalling of the cover concrete, then the mechanical volumetric ratio of the confining reinforcement in the barbell or flange is determined as in a) of this subclause (i.e. from expression (5.20), **5.4.3.4.2(4)**), with ν_d, ω_ν, b_c and b_o referring to the width of the barbell or flange.

b) If the value of x_u exceeds the depth of the barbell or flange after spalling of the cover concrete, the general method may be followed, which is based on: 1) the definition of the curvature ductility factor as $\mu_\phi = \phi_u / \phi_y$, 2) the calculation of ϕ_u as $\varepsilon_{cu2,c} / x_u$ and of ϕ_y as $\varepsilon_{sy} / (d - x_y)$, 3) section equilibrium for the estimation of neutral axis depths x_u and x_y, and 4) the values of strength and ultimate strain of confined concrete, $f_{ck,c}$ and $\varepsilon_{cu2,c}$ given in EN 1992-1-1:2004, **3.1.9** as a function of the effective lateral confining stress. The required confining reinforcement, if needed, and the confined wall lengths should be calculated accordingly.

(6) The confinement of **(3)-(5)** of this subclause should extend vertically over the height h_{cr} of the critical region as defined in **5.4.3.4.2(1)** and horizontally along a length l_c measured from the extreme compression fibre of the wall up to the point where unconfined concrete may spall due to large compressive strains. If more precise data is not available, the compressive strain at which spalling is expected may be taken as being equal to ε_{cu2}=0,0035. The confined boundary element may be limited to a distance of $x_u(1 - \varepsilon_{cu2}/\varepsilon_{cu2,c})$ from the hoop centreline near the extreme compression fibre, with the depth of the confined compression zone x_u at ultimate curvature estimated from equilibrium (cf. expression (5.21) for a constant width b_o of the confined compression zone) and the ultimate strain $\varepsilon_{cu2,c}$ of confined concrete estimated on the basis of EN 1992-1-1:2004, **3.1.9** as $\varepsilon_{cu2,c} = 0{,}0035 + 0{,}1\alpha\omega_{wd}$ (Figure 5.8). As a minimum, the length l_c of the confined boundary element should not be taken as being smaller than $0{,}15 \cdot l_w$ or $1{,}50 . b_w$.

Sofort-Download-Beuth-Book Supply Bureau-KdNr.7066075-ID.SCBLGSA1OBPULJD3QN0TD2AJ.1-2016-08-02 13:22:06

SUPPLIED BY BSB EDGE UNDER LICENCE FROM DIN FOR RAJARAMBAPU INSTITUTE OF TECHNOLOGY - SANGLI DIST. VIDE BSB EDGE ORDER REGISTRATION NO. ORD01-1088 ON 02/08/2016

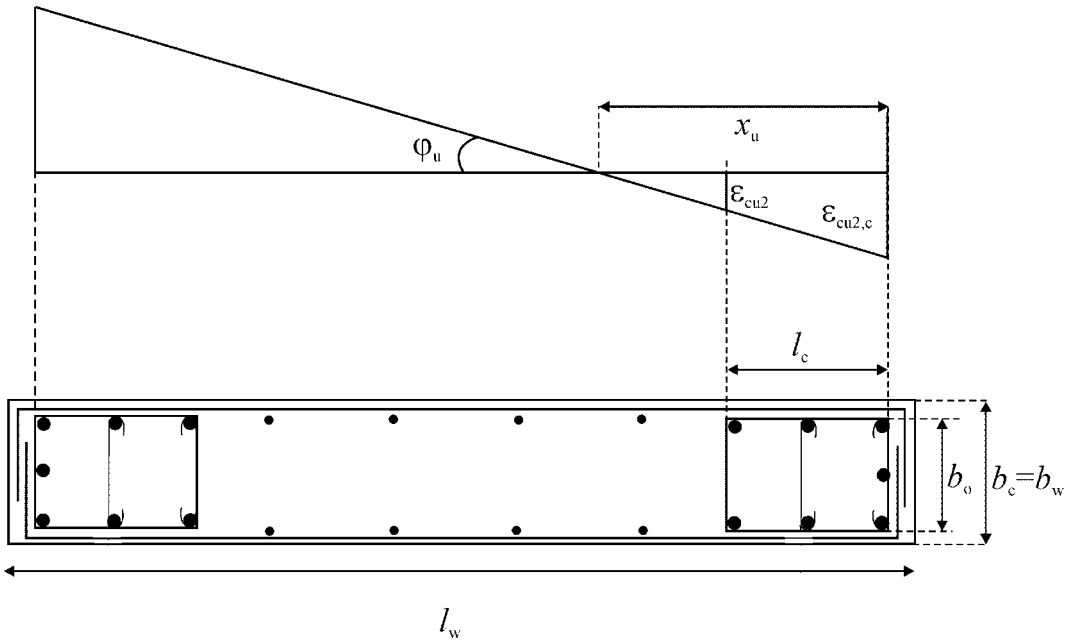

Figure 5.8: Confined boundary element of free-edge wall end

(top: strains at ultimate curvature; bottom: wall cross-section)

(7) No confined boundary element is required over wall flanges with thickness $b_f \geq h_s/15$ and width $l_f \geq h_s/5$, where h_s denotes the clear storey height (Figure 5.9). Nonetheless, confined boundary elements may be required at the ends of such flanges due to out-of-plane bending of the wall .

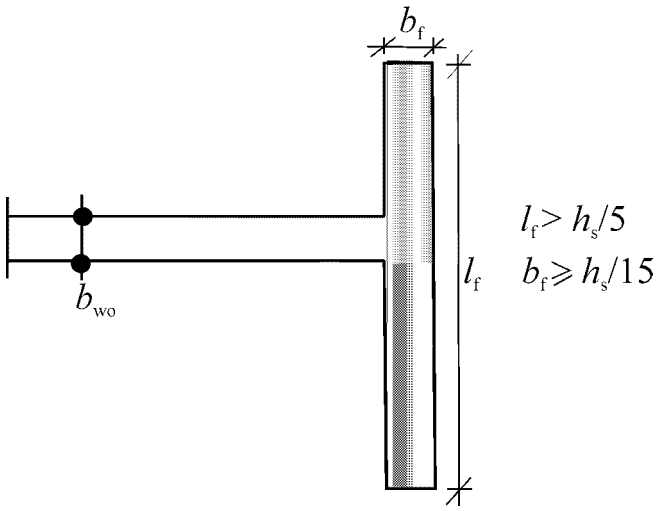

Figure 5.9: Confined boundary element not needed at wall end with a large transverse flange

(8) The longitudinal reinforcement ratio in the boundary elements should be not less than 0,005.

(9) The provisions of **5.4.3.2.2(9)** and **(11)** apply within the boundary elements of walls. Overlapping hoops should be used, so that every other longitudinal bar is engaged by a hoop or cross-tie.

Sofort-Download-Beuth-Book Supply Bureau-KdNr.7066075-ID.SCBLGSA1OBPULJD3QN0TD2AJ.1-2016-08-02 13:22:06

SUPPLIED BY BSB EDGE UNDER LICENCE FROM DIN FOR RAJARAMBAPU INSTITUTE OF TECHNOLOGY - SANGLI DIST. VIDE BSB EDGE ORDER REGISTRATION NO. ORD01-1088 ON 02/08/2016

(10) The thickness b_w of the confined parts of the wall section (boundary elements) should not be less than 200 mm. Moreover, if the length of the confined part does not exceed the maximum of $2b_w$ and $0{,}2l_w$, b_w should not be less than $h_s/15$, with h_s denoting the storey height. If the length of the confined part exceeds the maximum of $2b_w$ and $0{,}2l_w$ b_w should not be less than $h_s/10$ (See Figure 5.10).

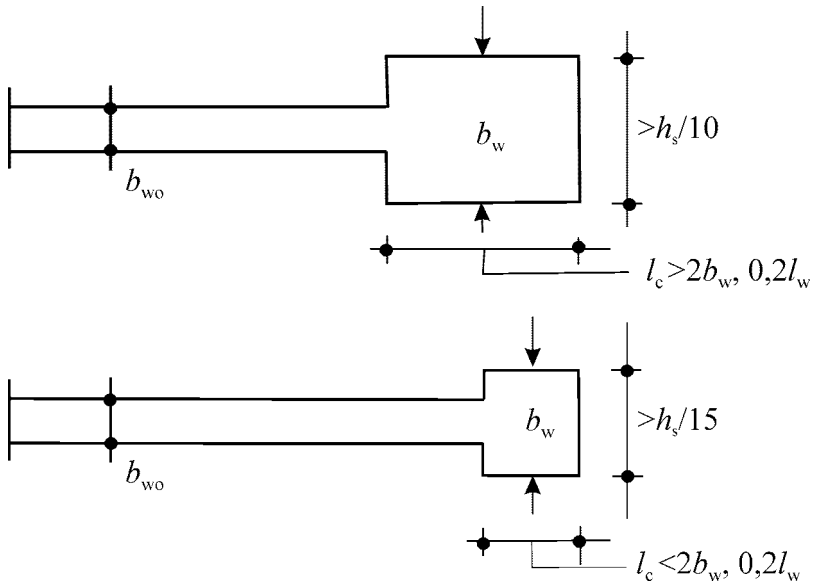

Figure 5.10: Minimum thickness of confined boundary elements

(11) In the height of the wall above the critical region only the relevant rules of EN 1992-1-1:2004 regarding vertical, horizontal and transverse reinforcement apply. However, in those parts of the section where under the seismic design situation the compressive strain ε_c exceeds 0,002, a minimum vertical reinforcement ratio of 0,005 should be provided.

(12) The transverse reinforcement of the boundary elements of **(4)-(10)** of this subclause may be determined in accordance with EN 1992-1-1:2004 alone, if one of the following conditions is fulfilled:

a) The value of the normalised design axial force ν_d is not greater than 0,15; or,

b) the value of ν_d is not greater than 0,20 and the q-factor used in the analysis is reduced by 15%.

5.4.3.5 Large lightly reinforced walls

5.4.3.5.1 Bending resistance

(1)P The ULS in bending with axial force shall be verified assuming horizontal cracking, in accordance with the relevant provisions of EN 1992-1-1:2004, including the plane sections assumption.

(2)P Normal stresses in the concrete shall be limited, to prevent out-of-plane instability of the wall.

Sofort-Download-Beuth-Book Supply Bureau-KdNr.7066075-ID.SCBLGSA1OBPULJD3QN0TD2AJ.1-2016-08-02 13:22:06

SUPPLIED BY BSB EDGE UNDER LICENCE FROM DIN FOR RAJARAMBAPU INSTITUTE OF TECHNOLOGY - SANGLI DIST. VIDE BSB EDGE ORDER REGISTRATION NO. ORD01-1088 ON 02/08/2016

(3) The requirement of **(2)**P of this subclause may be satisfied on the basis of the rules of EN 1992-1-1:2004 for second-order effects, supplemented with other rules for the normal stresses in the concrete if necessary.

(4) When the dynamic axial force of **5.4.2.5(3)**P and **(4)** is taken into account in the ULS verification for bending with axial force, the limiting strain ε_{cu2} for unconfined concrete may be increased to 0,005. A higher value may be taken into account for confined concrete, in accordance with EN 1992-1-1:2004, **3.1.9**, provided that spalling of the unconfined concrete cover is accounted for in the verification.

5.4.3.5.2 Shear resistance

(1) Due to the safety margin provided by the magnification of design shear forces in **5.4.2.5(1)**P and **(2)** and because the response (including possible inclined cracking) is deformation-controlled, wherever the value of V_{Ed} from **5.4.2.5(2)** is less than the design value of the shear resistance $V_{Rd,c}$ in EN 1992-1-1:2004, **6.2.2**, the minimum shear reinforcement ratio $\rho_{w,min}$ in the web is not required.

NOTE The value ascribed to $\rho_{w,min}$ for use in a country may be found in its National Annex to this document. The recommended value is the minimum value for walls in EN 1992-1-1:2004 and in its National Annex.

(2) Wherever the condition $V_{Ed} \leq V_{Rd,c}$ is not fulfilled, web shear reinforcement should be calculated in accordance with EN 1992-1-1:2004, on the basis of a variable inclination truss model, or a strut-and-tie model, whichever is most appropriate for the particular geometry of the wall.

(3) If a strut-and-tie model is used, the width of the strut should take into account the presence of openings and should not exceed $0{,}25 l_w$ or $4 b_{wo}$, whichever is smaller.

(4) The ULS against sliding shear at horizontal construction joints should be verified in accordance with EN 1992-1-1:2004, **6.2.5**, with the anchorage length of clamping bars crossing the interface increased by 50% over that required by EN 1992-1-1:2004.

5.4.3.5.3 Detailing for local ductility

(1) Vertical bars necessary for the verification of the ULS in bending with axial force, or for the satisfaction of any minimum reinforcement provisions, should be engaged by a hoop or a cross-tie with a diameter of not less than 6 mm or one third of the vertical bar diameter, d_{bL}. Hoops and cross-ties should be at a vertical spacing of not more than 100 mm or $8 d_{bL}$, whichever is less.

(2) Vertical bars necessary for the verification of the ULS in bending with axial force and laterally restrained by hoops and cross-ties in accordance with **(1)** of this subclause should be concentrated in boundary elements at the ends of the cross-section. These elements should extend in the direction of the length l_w of the wall over a length not less than b_w or $3 b_w \sigma_{cm}/f_{cd}$, whichever is greater, where σ_{cm} is the mean value of the concrete stress in the compression zone in the ULS of bending with axial force. The diameter of the vertical bars should not be less than 12 mm in the lower storey of the building, or in any storey where the length l_w of the wall is reduced over that of the

Sofort-Download-Beuth-Book Supply Bureau-KdNr.7066075-ID.SCBLGSA1OBPULJD3QN0TD2AJ.1-2016-08-02 13:22:06

SUPPLIED BY BSB EDGE UNDER LICENCE FROM DIN FOR RAJARAMBAPU INSTITUTE OF TECHNOLOGY - SANGLI DIST. VIDE BSB EDGE ORDER REGISTRATION NO. ORD01-1088 ON 02/08/2016

storey below by more than one-third of the storey height h_s. In all other storeys the diameter of vertical bars should not be less than 10 mm.

(3) To avoid a change in the mode of behaviour from one controlled by flexure to another controlled by shear, the amount of vertical reinforcement placed in the wall section should not unnecessarily exceed the amount required for the verification of the ULS in flexure with axial load and for the integrity of concrete.

(4) Continuous steel ties, horizontal or vertical, should be provided: (a) along all intersections of walls or connections with flanges; (b) at all floor levels; and (c) around openings in the wall. As a minimum, these ties should satisfy EN 1992-1-1:2004, **9.10**.

5.5 Design for DCH

5.5.1 Geometrical constraints and materials

5.5.1.1 Material requirements

(1)P A concrete class lower than C 20/25 shall not be used in primary seismic elements.

(2)P The requirement specified in paragraph **5.4.1.1(2)**P applies to this subclause.

(3)P In critical regions of primary seismic elements, reinforcing steel of class C in Table C.1 of EN 1992-1-1:2004 shall be used. Moreover, the upper characteristic (95%-fractile) value of the actual yield strength, $f_{yk,0,95}$, shall not exceed the nominal value by more than 25%.

5.5.1.2 Geometrical constraints

5.5.1.2.1 Beams

(1)P The width of primary seismic beams shall be not less than 200 mm.

(2)P The width to height ratio of the web of primary seismic beams shall satisfy expression (5.40b) of EN 1992-1-1:2004.

(3)P Paragraph **5.4.1.2.1(1)**P applies.

(4) Paragraph **5.4.1.2.1(2)** applies.

(5)P Paragraph **5.4.1.2.1(3)**P applies.

5.5.1.2.2 Columns

(1)P The minimum cross-sectional dimension of primary seismic columns shall be not less than 250 mm.

(2) Paragraph **5.4.1.2.2(1)** applies.

Sofort-Download-Beuth-Book Supply Bureau-KdNr.7066075-ID.SCBLGSA1OBPULJD3QN0TD2AJ.1-2016-08-02 13:22:06

SUPPLIED BY BSB EDGE UNDER LICENCE FROM DIN FOR RAJARAMBAPU INSTITUTE OF TECHNOLOGY - SANGLI DIST. VIDE BSB EDGE ORDER REGISTRATION NO. ORD01-1088 ON 02/08/2016

SUPPLIED BY BSB EDGE UNDER LICENCE FROM DIN FOR RAJARAMBAPU INSTITUTE OF TECHNOLOGY - SANGLI DIST. VIDE BSB EDGE ORDER REGISTRATION NO. ORD01-1088 ON 02/08/2016

Sofort-Download-Beuth-Book Supply Bureau-KdNr.7066075-ID.SCBLGSA1OBPULJD3QN0TD2AJ.1-2016-08-02 13:22:06

5.5.1.2.3 Ductile Walls

(1)P The provisions cover single primary seismic walls, as well as individual components of coupled primary seismic walls, under in-plane action effects, with full embedment and anchorage at their base in adequate basements or foundations, so that the wall is not allowed to rock. In this respect, walls supported by slabs or beams are not permitted (see also **5.4.1.2.5**).

(2) Paragraph **5.4.1.2.3(1)** applies.

(3) Additional requirements apply with respect to the thickness of the confined boundary elements of primary seismic walls, as specified in **5.5.3.4.5(8)** and **(9)**.

(4) Random openings, not regularly arranged to form coupled walls, should be avoided in primary seismic walls, unless their influence is either insignificant or accounted for in analysis, dimensioning and detailing.

5.5.1.2.4 Specific rules for beams supporting discontinued vertical elements

(1)P Paragraph **5.4.1.2.5(1)**P applies.

(2)P Paragraph **5.4.1.2.5(2)**P applies.

5.5.2 Design action effects

5.5.2.1 Beams

(1)P Paragraph **5.4.2.1(1)**P applies for the design values of bending moments and axial forces.

(2)P Paragraph **5.4.2.2(1)**P applies.

(3) Paragraph **5.4.2.2(2)** applies with a value $\gamma_{Rd} = 1{,}2$ in expression (5.8).

5.5.2.2 Columns

(1) Paragraph **5.4.2.1(1)**P (which refers also to the capacity design requirements in **5.2.3.3(2)**) applies for the design values of bending moments and axial forces.

(2)P Paragraph **5.4.2.3(1)**P applies.

(3) Paragraph **5.4.2.3(2)** applies with a value $\gamma_{Rd} = 1{,}3$ in expression (5.9).

(4) Paragraph **5.4.2.3(3)** applies.

5.5.2.3 Beam-column joints

(1)P The horizontal shear acting on the core of a joint between primary seismic beams and columns shall be determined taking into account the most adverse conditions under seismic actions, i.e. capacity design conditions for the beams framing into the joint and the lowest compatible values of shear forces in the other framing elements.

(2) Simplified expressions for the horizontal shear force acting on the concrete core of the joints may be used as follows:

a) for interior beam-column joints:

$$V_{\mathrm{jhd}} = \gamma_{\mathrm{Rd}}(A_{\mathrm{s1}} + A_{\mathrm{s2}}) f_{\mathrm{yd}} - V_{\mathrm{C}} \tag{5.22}$$

b) for exterior beam-column joints:

$$V_{\mathrm{jhd}} = \gamma_{\mathrm{Rd}} \cdot A_{\mathrm{s1}} \cdot f_{\mathrm{yd}} - V_{\mathrm{C}} \tag{5.23}$$

where

A_{s1} is the area of the beam top reinforcement;

A_{s2} is the area of the beam bottom reinforcement;

V_{C} is the shear force in the column above the joint, from the analysis in the seismic design situation;

γ_{Rd} is a factor to account for overstrength due to steel strain-hardening and should be not less than 1,2.

(3) The shear forces acting on the joints shall correspond to the most adverse sense of the seismic action influencing the values A_{s1}, A_{s2} and V_{C} to be used in expressions (5.22) and (5.23).

5.5.2.4 Ductile Walls

5.5.2.4.1 Special provisions for in-plane slender walls

(1)P Paragraph **5.4.2.4(1)**P applies.

(2) Paragraph **5.4.2.4(2)** applies.

(3) Paragraph **5.4.2.4(3)** applies.

(4)P Paragraph **5.4.2.4(4)**P applies.

(5) Paragraph **5.4.2.4(5)** applies.

(6)P Paragraph **5.4.2.4(6)**P applies.

(7) The requirement of **(6)**P is deemed to be satisfied if the following simplified procedure is applied, incorporating the capacity design rule:

The design shear forces V_{Ed} should be derived in accordance with the expression:

$$V_{\mathrm{Ed}} = \varepsilon \cdot V'_{\mathrm{Ed}} \tag{5.24}$$

where

V'_{Ed} is the shear force from the analysis;

Sofort-Download-Beuth-Book Supply Bureau-KdNr.7066075-ID.SCBLGSA1OBPULJD3QN0TD2AJ.1-2016-08-02 13:22:06

SUPPLIED BY BSB EDGE UNDER LICENCE FROM DIN FOR RAJARAMBAPU INSTITUTE OF TECHNOLOGY - SANGLI DIST. VIDE BSB EDGE ORDER REGISTRATION NO. ORD01-1088 ON 02/08/2016

ε is the magnification factor, calculated from expression (5.25), but not less than 1,5:

$$\varepsilon = q \cdot \sqrt{\left(\frac{\gamma_{\mathrm{Rd}}}{q} \cdot \frac{M_{\mathrm{Rd}}}{M_{\mathrm{Ed}}}\right)^2 + 0{,}1\left(\frac{S_{\mathrm{e}}(T_{\mathrm{C}})}{S_{\mathrm{e}}(T_1)}\right)^2} \leq q \tag{5.25}$$

where

q is the behaviour factor used in the design;

M_{Ed} is the design bending moment at the base of the wall;

M_{Rd} is the design flexural resistance at the base of the wall;

γ_{Rd} is the factor to account for overstrength due to steel strain-hardening; in the absence of more precise data, γ_{Rd} may be taken equal to 1,2;

T_1 is the fundamental period of vibration of the building in the direction of shear forces V_{Ed};

T_{C} is the upper limit period of the constant spectral acceleration region of the spectrum (see **3.2.2**);

$S_{\mathrm{e}}(\mathrm{T})$ is the ordinate of the elastic response spectrum (see **3.2.2**).

(8) The provisions of **5.4.2.4(8)** apply to slender walls of DCH.

5.5.2.4.2 Special provisions for squat walls

(1)P In primary seismic walls with a height to length ratio, $h_{\mathrm{w}}/l_{\mathrm{w}}$, not greater than 2,0, there is no need to modify the bending moments from the analysis. Shear magnification due to dynamic effects may also be neglected.

(2) The shear force V'_{Ed} from the analysis should be increased as follows:

$$V_{\mathrm{Ed}} = \gamma_{\mathrm{Rd}} \cdot \left(\frac{M_{\mathrm{Rd}}}{M_{\mathrm{Ed}}}\right) \cdot V'_{\mathrm{Ed}} \leq q \cdot V'_{\mathrm{Ed}} \tag{5.26}$$

(see **5.5.2.4.1(7)** for definitions and values of the variables).

5.5.3 ULS verifications and detailing

5.5.3.1 Beams

5.5.3.1.1 Resistance in bending

(1)P The bending resistance shall be computed in accordance with EN 1992-1-1:2004.

(2) Paragraph **5.4.3.1.1(2)** applies.

(3) Paragraph **5.4.3.1.1(3)** applies.

Sofort-Download-Beuth-Book Supply Bureau-KdNr.7066075-ID.SCBLGSA1OBPULJD3QN0TD2AJ.1-2016-08-02 13:22:06

SUPPLIED BY BSB EDGE UNDER LICENCE FROM DIN FOR RAJARAMBAPU INSTITUTE OF TECHNOLOGY - SANGLI DIST. VIDE BSB EDGE ORDER REGISTRATION NO. ORD01-1088 ON 02/08/2016

SUPPLIED BY BSB EDGE UNDER LICENCE FROM DIN FOR RAJARAMBAPU INSTITUTE OF TECHNOLOGY - SANGLI DIST. VIDE BSB EDGE ORDER REGISTRATION NO. ORD01-1088 ON 02/08/2016

Sofort-Download-Beuth-Book Supply Bureau-KdNr.7066075-ID.SCBLGSA1OBPULJD3QN0TD2AJ.1-2016-08-02 13:22:06

5.5.3.1.2 Shear resistance

(1)P The shear resistance computations and verifications shall be carried out in accordance with EN 1992-1-1:2004, unless specified otherwise in the following paragraphs.

(2)P In the critical regions of primary seismic beams, the strut inclination θ in the truss model shall be 45°.

(3) With regard to the arrangement of shear reinforcement within the critical region at an end of a primary seismic beam where the beam frames into a column, the following cases should be distinguished, depending on the algebraic value of the ratio $\zeta = V_{Ed,min}/V_{Ed,max}$ between the minimum and maximum acting shear forces, as derived in accordance with **5.5.2.1(3).**

a) If $\zeta \geq -0{,}5$, the shear resistance provided by the reinforcement should be computed in accordance with EN 1992-1-1:2004.

b) If $\zeta < -0{,}5$, i.e. when an almost full reversal of shear forces is expected, then:

i) if $$\left|V_E\right|_{max} \leq (2+\zeta)\cdot f_{ctd}\cdot b_w\cdot d \qquad (5.27)$$

where f_{ctd} is the design value of the concrete tensile strength from EN 1992-1-1:2004, the same rule as in a) of this paragraph applies.

ii) if $|V_E|_{max}$ exceeds the limit value in expression (5.27), inclined reinforcement should be provided in two directions, either at ±45° to the beam axis or along the two diagonals of the beam in elevation, and half of $|V_E|_{max}$ should be resisted by stirrups and half by inclined reinforcement;

– In such a case, the verification is carried out by means of the condition:

$$0{,}5V_{Emax} \leq 2A_s\cdot f_{yd}\cdot \sin\alpha \qquad (5.28)$$

where

A_s is the area of the inclined reinforcement in one direction, crossing the potential sliding plane (i.e. the beam end section);

α is the angle between the inclined reinforcement and the beam axis (normally α = 45°, or tan $\alpha \approx (d\text{-}d')/l_b$).

5.5.3.1.3 Detailing for local ductility

(1)P The regions of a primary seismic beam up to a distance l_{cr}=1.5h_w (where h_w denotes the height of the beam) from an end cross-section where the beam frames into a beam-column joint, as well as from both sides of any other cross-section likely to yield in the seismic design situation, shall be considered critical regions.

(2) Paragraph **5.4.3.1.2(2)** applies.

(3)P Paragraph **5.4.3.1.2(3)**P applies.

(4) Paragraph **5.4.3.1.2(4)** applies.

(5)P To satisfy the necessary ductility conditions, the following conditions shall be satisfied along the entire length of a primary seismic beam:

a) paragraph **5.4.3.1.2(5)**P shall be satisfied

b) at least two high bond bars with d_b = 14 mm shall be provided both at the top and the bottom of the beam that run along the entire length of the beam;

c) one quarter of the maximum top reinforcement at the supports shall run along the entire beam length.

(6)P **5.4.3.1.2(6)**P applies with expression (5.13) replaced by the following:

$$s=\min\{h_w/4;\ 24d_{bw};\ 175;\ 6d_{bL}\}. \tag{5.29}$$

5.5.3.2 Columns

5.5.3.2.1 Resistances

(1)P Paragraph **5.4.3.2.1(1)**P applies.

(2) Paragraph **5.4.3.2.1(2)** applies.

(3)P In primary seismic columns the value of the normalised axial force ν_d shall not exceed 0,55.

5.5.3.2.2 Detailing for local ductility

(1)P Paragraph **5.4.3.2.2(1)**P applies.

(2)P Paragraph **5.4.3.2.2(2)**P applies.

(3)P Paragraph **5.4.3.2.2(3)**P applies.

(4) In the absence of more precise information, the length of the critical region l_{cr} may be computed as follows (in metres):

$$l_{cr} = \max\{1{,}5h_c;\ l_{cl}/6;\ 0{,}6\} \tag{5.30}$$

where

h_c is the largest cross-sectional dimension of the column (in metres); and

l_{cl} is its clear length (in metres).

(5)P Paragraph **5.4.3.2.2(5)**P applies.

(6)P Paragraph **5.4.3.2.2(6)**P applies.

(7) The detailing of critical regions above the base of the column should be based on a minimum value of the curvature ductility factor μ_ϕ (see **5.2.3.4**) obtained from

Sofort-Download-Beuth-Book Supply Bureau-KdNr.7066075-ID.SCBLGSA1OBPULJD3QN0TD2AJ.1-2016-08-02 13:22:06

SUPPLIED BY BSB EDGE UNDER LICENCE FROM DIN FOR RAJARAMBAPU INSTITUTE OF TECHNOLOGY - SANGLI DIST. VIDE BSB EDGE ORDER REGISTRATION NO. ORD01-1088 ON 02/08/2016

5.2.3.4(3). Wherever a column is protected against plastic hinging by the capacity design procedure of **4.4.2.3(4)** (i.e. where expression (4.29) is satisfied), the value q_o in expressions (5.4) and (5.5) may be substituted by 2/3 of the value of q_o applying in a direction parallel to the cross-sectional depth h_c of the column.

(8)P Paragraph **5.4.3.2.2(7)**P applies.

(9) The requirements of **(6)**P, **(7)** and **(8)**P of this subclause are deemed to be satisfied, if **5.4.3.2.2(8)** is satisfied with the values of μ_ϕ specified in **(6)**P and **(7)** of this subclause.

(10) The minimum value of ω_{wd} to be provided is 0,12 within the critical region at the base of the column, or 0,08 in all column critical regions above the base.

(11)P Paragraph **5.4.3.2.2(10)**P applies.

(12) The minimal conditions of **(11)**P of this subclause are deemed to be satisfied if all of the following requirements are met.

a) The diameter d_{bw} of the hoops is at least equal to

$$d_{bw} \geq 0{,}4 \cdot d_{bL,\ max} \cdot \sqrt{f_{ydL} / f_{ydw}} \tag{5.31}$$

b) The spacing s of hoops (in millimetres) does not exceed:

$$s = \min \{b_o / 3; 125; 6d_{bL}\} \tag{5.32}$$

where

b_o (in millimetres) is the minimum dimension of the concrete core (to the inside of the hoops); and

d_{bL} is the the minimum diameter of the longitudinal bars (in millimetres).

c) The distance between consecutive longitudinal bars restrained by hoops or cross-ties does not exceed 150 mm.

(13)P In the lower two storeys of buildings, hoops in accordance with **(11)**P and **(12)** of this subclause shall be provided beyond the critical regions for an additional length equal to half the length of these regions.

(14) The amount of longitudinal reinforcement provided at the base of the bottom storey column (i.e. where the column is connected to the foundation) should be not less than that provided at the top of the storey.

5.5.3.3 Beam-column joints

(1)P The diagonal compression induced in the joint by the diagonal strut mechanism shall not exceed the compressive strength of concrete in the presence of transverse tensile strains.

Sofort-Download-Beuth-Book Supply Bureau-KdNr.7066075-ID.SCBLGSA1OBPULJD3QN0TD2AJ.1-2016-08-02 13:22:06

SUPPLIED BY BSB EDGE UNDER LICENCE FROM DIN FOR RAJARAMBAPU INSTITUTE OF TECHNOLOGY - SANGLI DIST. VIDE BSB EDGE ORDER REGISTRATION NO. ORD01-1088 ON 02/08/2016

(2) In the absence of a more precise model, the requirement of **(1)**P of this subclause may be satisfied by means of the subsequent rules.

a) At interior beam-column joints the following expression should be satisfied:

$$V_{\mathrm{jhd}} \leq \eta f_{\mathrm{cd}} \sqrt{1-\frac{\nu_{\mathrm{d}}}{\eta}} b_{\mathrm{j}}\, h_{\mathrm{jc}} \tag{5.33}$$

where

$\eta = 0{,}6(1\text{-}f_{\mathrm{ck}}/250)$;

h_{jc} is the distance between extreme layers of column reinforcement;

b_j is as defined in expression (5.34);

ν_{d} is the normalised axial force in the column above the joint; and

f_{ck} is given in MPa.

b) At exterior beam-column joints:

V_{jhd} should be less than 80% of the value given by the right-hand-side of expression (5.33) where:

V_{jhd} is given by expressions (5.22) and (5.23) respectively;

and the effective joint width b_{j} is:

a) if $b_{\mathrm{c}} > b_{\mathrm{w}}$: $b_{\mathrm{j}} = \min\{b_{\mathrm{c}}; (b_{\mathrm{w}} + 0{,}5 \cdot h_{\mathrm{c}})\}$; (5.34a)

b) if $b_{\mathrm{c}} < b_{\mathrm{w}}$: $b_{\mathrm{j}} = \min\{b_{\mathrm{w}}; (b_{\mathrm{c}} + 0{,}5 \cdot h_{\mathrm{c}})\}$ (5.34b)

(3) Adequate confinement (both horizontal and vertical) of the joint should be provided, to limit the maximum diagonal tensile stress of concrete max σ_{ct} to f_{ctd}. In the absence of a more precise model, this requirement may be satisfied by providing horizontal hoops with a diameter of not less than 6 mm within the joint, such that:

$$\frac{A_{\mathrm{sh}} \cdot f_{\mathrm{ywd}}}{b_{\mathrm{j}} \cdot h_{\mathrm{jw}}} \geq \frac{\left(\dfrac{V_{\mathrm{jhd}}}{b_{\mathrm{j}} \cdot h_{\mathrm{jc}}}\right)^2}{f_{\mathrm{ctd}} + \nu_{\mathrm{d}} f_{\mathrm{cd}}} - f_{\mathrm{ctd}} \tag{5.35}$$

where

A_{sh} is the total area of the horizontal hoops;

V_{jhd} ▌AC⟩ is as defined in expressions (5.22) and (5.23) ⟨AC▐;

h_{jw} is the distance between the top and the bottom reinforcement of the beam;

h_{jc} is the distance between extreme layers of column reinforcement;

b_j is as defined in expression (5.34);

ν_{d} is the normalised design axial force of the column above ($\nu_{\mathrm{d}} = N_{\mathrm{Ed}}/A_{\mathrm{c}}{\cdot}f_{\mathrm{cd}}$);

Sofort-Download-Beuth-Book Supply Bureau-KdNr.7066075-ID.SCBLGSA1OBPULJD3QN0TD2AJ.1-2016-08-02 13:22:06

SUPPLIED BY BSB EDGE UNDER LICENCE FROM DIN FOR RAJARAMBAPU INSTITUTE OF TECHNOLOGY - SANGLI DIST. VIDE BSB EDGE ORDER REGISTRATION NO. ORD01-1088 ON 02/08/2016

f_{ctd} is the design value of the tensile strength of concrete, in accordance with EN 1992-1-1:2004.

(4) As an alternative to the rule specified in **(3)** of this subclause, integrity of the joint after diagonal cracking may be ensured by horizontal hoop reinforcement. To this end the following total area of horizontal hoops should be provided in the joint.

a) In interior joints:

$$A_{sh} f_{ywd} \geq \gamma_{Rd}(A_{s1}+A_{s2})\, f_{yd}(1\text{-}0{,}8\, \nu_d) \tag{5.36a}$$

b) In exterior joints:

$$A_{sh} f_{ywd} \geq \gamma_{Rd} A_{s2} f_{yd}(1\text{-}0{,}8\, \nu_d) \tag{5.36b}$$

where γ_{Rd} is equal to 1,2 (cf **5.5.2.3(2)**) and the normalised axial force ν_d refers to the column above the joint in expression (5.36a), or to the column below the joint in expression (5.36b).

(5) The horizontal hoops calculated as in **(3)** and **(4)** of this subclause should be uniformly distributed within the depth h_{jw} between the top and bottom bars of the beam. In exterior joints they should enclose the ends of beam bars bent toward the joint.

(6) Adequate vertical reinforcement of the column passing through the joint should be provided, so that:

$$A_{sv,i} \geq (2/3) \cdot A_{sh} \cdot (h_{jc} / h_{jw}) \tag{5.37}$$

where A_{sh} is the required total area of the horizontal hoops in accordance with **(3)** and **(4)** of this subclause and $A_{sv,i}$ denotes the total area of the intermediate bars placed in the relevant column faces between corner bars of the column (including bars contributing to the longitudinal reinforcement of columns).

(7) **5.4.3.3(1)** applies.

(8) **5.4.3.3(2)** applies.

(9)P **5.4.3.3(3)**P applies.

5.5.3.4 Ductile Walls

5.5.3.4.1 Bending resistance

(1)P The bending resistance shall be evaluated and verified as for columns, under the most unfavourable axial force for the seismic design situation.

(2) In primary seismic walls the value of the normalised axial force ν_d should not exceed 0,35.

5.5.3.4.2 Diagonal compression failure of the web due to shear

(1) The value of $V_{Rd,max}$ may be calculated as follows:

Sofort-Download-Beuth-Book Supply Bureau-KdNr.7066075-ID.SCBLGSA1OBPULJD3QN0TD2AJ.1-2016-08-02 13:22:06

SUPPLIED BY BSB EDGE UNDER LICENCE FROM DIN FOR RAJARAMBAPU INSTITUTE OF TECHNOLOGY - SANGLI DIST. VIDE BSB EDGE ORDER REGISTRATION NO. ORD01-1088 ON 02/08/2016

a) outside the critical region:

as in EN 1992-1-1:2004, with the length of the internal lever arm, z, equal to $0{,}8l_w$ and the inclination of the compression strut to the vertical, $\tan\theta$, equal to 1,0.

b) in the critical region:

40% of the value outside the critical region.

5.5.3.4.3 Diagonal tension failure of the web due to shear

(1)P The calculation of web reinforcement for the ULS verification in shear shall take into account the value of the shear ratio $\alpha_s = M_{Ed}/(V_{Ed}\, l_w)$. The maximum value of α_s in a storey should be used for the ULS verification of the storey in shear.

(2) If the ratio $\alpha_s \geq 2{,}0$, the provisions of in EN 1992-1-1:2004 **6.2.3(1)-(7)** apply, with the values of z and $\tan\theta$ taken as in **5.5.3.4.2(1)** a).

(3) If $\alpha_s < 2{,}0$ the following provisions apply:

a) the horizontal web bars should satisfy the following expression (see EN 1992-1-1:2004, **6.2.3(8)**):

$$V_{Ed} \leq V_{Rd,c} + 0{,}75\rho_h f_{yd,h} b_{wo} \alpha_s l_w \tag{5.38}$$

where

ρ_h is the reinforcement ratio of horizontal web bars ($\rho_h = A_h/(b_{wo} \cdot s_h)$);

$f_{yd,h}$ is the design value of the yield strength of the horizontal web reinforcement;

$V_{Rd,c}$ is the design value of the shear resistance for members without shear reinforcement, in accordance to EN 1992-1-1:2004,

In the critical region of the wall $V_{Rd,c}$ should be equal to 0 if the axial force N_{Ed} is tensile.

b) Vertical web bars, anchored and spliced along the height of the wall in accordance with EN 1992-1-1:2004, should be provided to satisfy the condition:

$$\rho_h f_{yd,h} b_{wo} z \leq \rho_v f_{yd,v}\, b_{wo}\, z + \min N_{Ed} \tag{5.39}$$

where

ρ_v is the reinforcement ratio of vertical web bars ($\rho_v = A_v/b_{wo} \cdot s_v$);

$f_{yd,v}$ is the design value of the yield strength of the vertical web reinforcement;

and where the axial force N_{Ed} is positive when compressive.

(4) Horizontal web bars should be fully anchored at the ends of the wall section, e.g. through 90° or 135° hooks.

Sofort-Download-Beuth-Book Supply Bureau-KdNr.7066075-ID.SCBLGSA1OBPULJD3QN0TD2AJ.1-2016-08-02 13:22:06

SUPPLIED BY BSB EDGE UNDER LICENCE FROM DIN FOR RAJARAMBAPU INSTITUTE OF TECHNOLOGY - SANGLI DIST. VIDE BSB EDGE ORDER REGISTRATION NO. ORD01-1088 ON 02/08/2016

(5) Horizontal web bars in the form of elongated closed or fully anchored stirrups may also be assumed to fully contribute to the confinement of the boundary elements of the wall.

5.5.3.4.4 Sliding shear failure

(1)P At potential sliding shear planes (for example, at construction joints) within critical regions the following condition shall be satisfied:

$V_{Ed} \leq V_{Rd,\,S}$

where $V_{Rd,S}$ is the design value of the shear resistance against sliding.

(2) The value of $V_{Rd,S}$ may be as follows:

$$V_{Rd,S} = V_{dd} + V_{id} + V_{fd} \tag{5.40}$$

with:

$$V_{dd} = \min \begin{cases} 1{,}3 \cdot \Sigma A_{sj} \cdot \sqrt{f_{cd} \cdot f_{yd}} \\ 0{,}25 \cdot f_{yd} \cdot \Sigma A_{sj} \end{cases} \tag{5.41}$$

$$V_{id} = \Sigma A_{si} \cdot f_{yd} \cdot \cos\varphi \tag{5.42}$$

$$V_{fd} = \min \begin{cases} \mu_f \cdot \left[\left(\Sigma A_{sj} \cdot f_{yd} + N_{Ed} \right) \cdot \xi + M_{Ed} / z \right] \\ 0{,}5\eta \cdot f_{cd} \cdot \xi \cdot l_w \cdot b_{wo} \end{cases} \tag{5.43}$$

where

V_{dd} is the dowel resistance of the vertical bars;

V_{id} is the shear resistance of inclined bars (at an angle φ to the potential sliding plane, e.g. construction joint);

V_{fd} is the friction resistance;

μ_f is the concrete-to-concrete friction coefficient under cyclic actions, which may be assumed equal to 0,6 for smooth interfaces and to 0,7 for rough ones, as defined in EN 1992-1-1:2004, **6.2.5(2)**;

z is the length of the internal lever arm;

ξ is the normalised neutral axis depth;

ΣA_{sj} is the sum of the areas of the vertical bars of the web and of additional bars arranged in the boundary elements specifically for resistance against sliding;

ΣA_{si} is the sum of the areas of all inclined bars in both directions; large diameter bars are recommended for this purpose;

$$\eta = 0{,}6\ (1 - f_{ck}(\text{MPa})/250) \tag{5.44}$$

N_{Ed} is assumed to be positive when compressive.

Sofort-Download-Beuth-Book Supply Bureau-KdNr.7066075-ID.SCBLGSA1OBPULJD3QN0TD2AJ.1-2016-08-02 13:22:06

SUPPLIED BY BSB EDGE UNDER LICENCE FROM DIN FOR RAJARAMBAPU INSTITUTE OF TECHNOLOGY - SANGLI DIST. VIDE BSB EDGE ORDER REGISTRATION NO. ORD01-1088 ON 02/08/2016

(3) For squat walls the following should be satisfied :

a) at the base of the wall V_{id} should be greater than $V_{Ed}/2$;

b) at higher levels V_{id} should be greater than $V_{Ed}/4$.

(4) Inclined bars should be fully anchored on both sides of potential sliding interfaces and should cross all sections of the wall within a distance of $0{,}5 \cdot l_w$ or $0{,}5 \cdot h_w$, whichever is smaller, above the critical base section.

(5) Inclined bars lead to an increase of the bending resistance at the base of the wall, which should be taken into account whenever the acting shear V_{Ed} is computed in accordance with the capacity design rule (see **5.5.2.4.1(6)**P and **(7)** and **5.5.2.4.2(2)**). Two alternative methods may be used.

a) The increase of bending resistance ΔM_{Rd}, to be used in the calculation of V_{Ed}, may be estimated as:

$$\Delta M_{Rd} = \frac{1}{2} \cdot \Sigma A_{si} \cdot f_{yd} \cdot \sin\varphi \cdot l_i \tag{5.45}$$

where

l_i is the distance between centrelines of the two sets of inclined bars, placed at an angle of $\pm\phi$ to the potential sliding plane, measured at the base section;

and the other symbols are as in expression (5.42).

b) An acting shear V_{Ed} may be computed disregarding the effect of the inclined bars. In expression (5.42) V_{id} is the net shear resistance of the inclined bars (i.e. the actual shear resistance reduced by the increase of the acting shear). Such net shear resistance of the inclined bars against sliding may be estimated as:

$$V_{id} = \Sigma A_{si} \cdot f_{yd} \cdot \left[\cos\varphi - 0{,}5 \cdot l_i \cdot \sin\varphi / (\alpha_s \cdot l_w)\right] \tag{5.46}$$

5.5.3.4.5 Detailing for local ductility

(1) Paragraph **5.4.3.4.2(1)** applies.

(2) Paragraph **5.4.3.4.2(2)** applies.

(3) Paragraph **5.4.3.4.2(3)** applies.

(4) Paragraph **5.4.3.4.2(4)** applies.

(5) Paragraph **5.4.3.4.2(5)** applies.

(6) Paragraph **5.4.3.4.2(6)** applies.

(7) Paragraph **5.4.3.4.2(8)** applies.

(8) Paragraph **5.4.3.4.2(10)** applies.

Sofort-Download-Beuth-Book Supply Bureau-KdNr.7066075-ID.SCBLGSA1OBPULJD3QN0TD2AJ.1-2016-08-02 13:22:06

SUPPLIED BY BSB EDGE UNDER LICENCE FROM DIN FOR RAJARAMBAPU INSTITUTE OF TECHNOLOGY - SANGLI DIST. VIDE BSB EDGE ORDER REGISTRATION NO. ORD01-1088 ON 02/08/2016

(9) If the wall is connected to a flange with thickness $b_f \geq h_s/15$ and width $l_f \geq h_s/5$ (where h_s denotes the clear storey height), and the confined boundary element needs to extend beyond the flange into the web for an additional length of up to $3b_{wo}$, then the thickness b_w of the boundary element in the web should only follow the provisions in **5.4.1.2.3(1)** for b_{wo} (Figure 5.11).

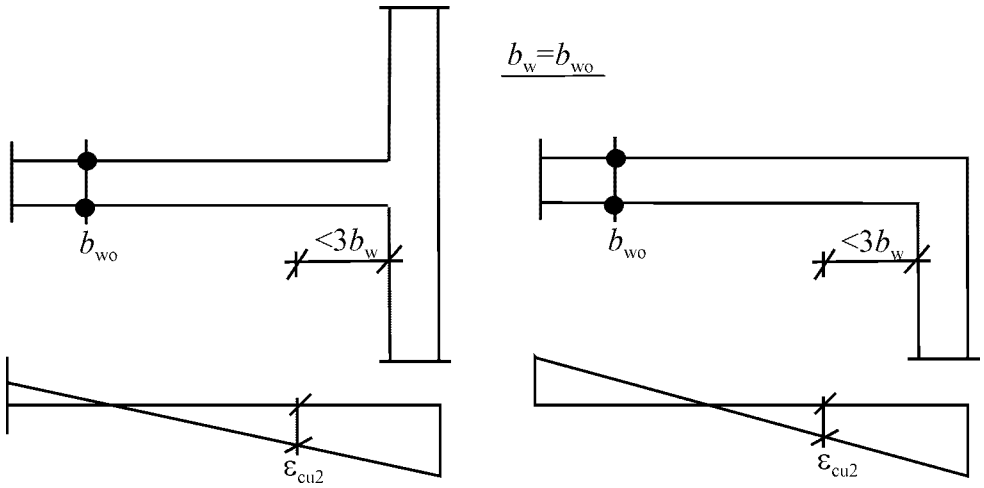

Figure 5.11: Minimum thickness of confined boundary elements in DCH walls with large flanges

(10) Within the boundary elements of walls the requirements specified in **5.5.3.2.2(12)** apply and there should be a minimum value of ω_{wd} of 0,12. Overlapping hoops should be used, so that every other longitudinal bar is engaged by a hoop or cross-tie.

(11) Above the critical region boundary elements should be provided for one more storey, with at least half the confining reinforcement required in the critical region.

(12) **5.4.3.4.2(11)** applies.

(13)P Premature web shear cracking of walls shall be prevented, by providing a minimum amount of web reinforcement: $\rho_{h,min} = \rho_{v,min} = 0{,}002$.

(14) The web reinforcement should be provided in the form of two grids (curtains) of bars with the same bond characteristics, one at each face of the wall. The grids should be connected through cross-ties spaced at about 500 mm.

(15) Web reinforcement should have a diameter of not less than 8 mm, but not greater than one-eighth of the width b_{wo} of the web. It should be spaced at not more than 250 mm or 25 times the bar diameter, whichever is smaller.

(16) To counterbalance the unfavourable effects of cracking along cold joints and the associated uncertainties, a minimum amount of fully anchored vertical reinforcement should be provided across such joints. The minimum ratio of this reinforcement, ρ_{min}, necessary to re-establish the resistance of uncracked concrete against shear, is:

Sofort-Download-Beuth-Book Supply Bureau-KdNr.7066075-ID.SCBLGSA1OBPULJD3QN0TD2AJ.1-2016-08-02 13:22:06

SUPPLIED BY BSB EDGE UNDER LICENCE FROM DIN FOR RAJARAMBAPU INSTITUTE OF TECHNOLOGY - SANGLI DIST. VIDE BSB EDGE ORDER REGISTRATION NO. ORD01-1088 ON 02/08/2016

$$\rho_{\min} \geq \begin{cases} \left(1{,}3 \cdot f_{\mathrm{ctd}} - \dfrac{N_{\mathrm{Ed}}}{A_{\mathrm{w}}}\right) / \left(f_{\mathrm{yd}} \cdot \left(1 + 1{,}5\sqrt{f_{\mathrm{cd}} / f_{\mathrm{yd}}}\right)\right) \\ 0{,}0025 \end{cases} \tag{5.47}$$

where A_{w} is the total horizontal cross-sectional area of the wall and N_{Ed} shall be positive when compressive.

5.5.3.5 Coupling elements of coupled walls

(1)P Coupling of walls by means of slabs shall not be taken into account, as it is not effective.

(2) The provisions of **5.5.3.1** may only be applied to coupling beams, if either one of the following conditions is fulfilled:

a) Cracking in both diagonal directions is unlikely. An acceptable application rule is:

$$V_{\mathrm{Ed}} \leq f_{\mathrm{ctd}} b_{\mathrm{w}} d \tag{5.48}$$

b) A prevailing flexural mode of failure is ensured. An acceptable application rule is: $l/h \geq 3$.

(3) If neither of the conditions in **(2)** is met, the resistance to seismic actions should be provided by reinforcement arranged along both diagonals of the beam, in accordance with the following (see Figure 5.12):

a) It should be ensured that the following expression is satisfied:

$$V_{\mathrm{Ed}} \leq 2 \cdot A_{\mathrm{si}} \cdot f_{\mathrm{yd}} \cdot \sin\alpha \tag{5.49}$$

where

V_{Ed} is the design shear force in the coupling element ($V_{\mathrm{Ed}} = 2 \cdot M_{\mathrm{Ed}}/l$);

A_{si} is the total area of steel bars in each diagonal direction;

α is the angle between the diagonal bars and the axis of the beam.

b) The diagonal reinforcement should be arranged in column-like elements with side lengths at least equal to $0{,}5b_{\mathrm{w}}$; its anchorage length should be 50% greater than that required by EN 1992-1-1:2004.

c) Hoops should be provided around these column-like elements to prevent buckling of the longitudinal bars. The provisions of **5.5.3.2.2(12)** apply for the hoops..

d) Longitudinal and transverse reinforcement should be provided on both lateral faces of the beam, meeting the minimum requirements specified in EN 1992-1-1:2004 for deep beams. The longitudinal reinforcement should not be anchored in the coupled walls and should only extend into them by 150 mm.

Sofort-Download-Beuth-Book Supply Bureau-KdNr.7066075-ID.SCBLGSA1OBPULJD3QN0TD2AJ.1-2016-08-02 13:22:06

SUPPLIED BY BSB EDGE UNDER LICENCE FROM DIN FOR RAJARAMBAPU INSTITUTE OF TECHNOLOGY - SANGLI DIST. VIDE BSB EDGE ORDER REGISTRATION NO. ORD01-1088 ON 02/08/2016

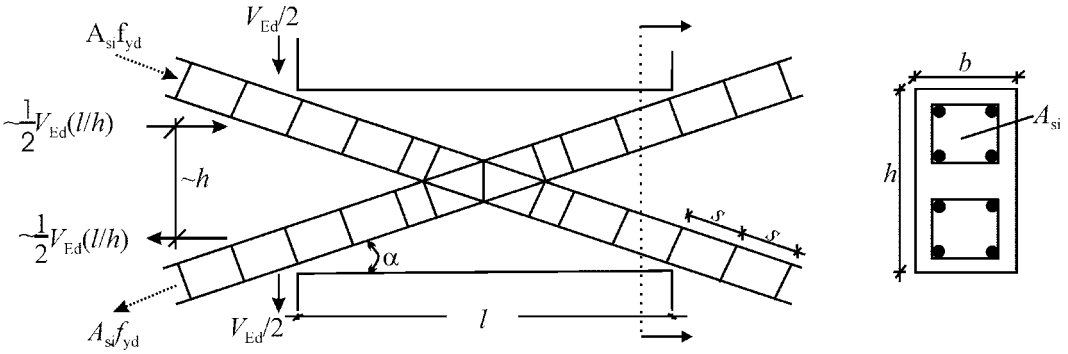

Figure 5.12: Coupling beams with diagonal reinforcement

5.6 Provisions for anchorages and splices

5.6.1 General

(1)P EN 1992-1-1:2004, Section **8** for the detailing of reinforcement applies, with the additional rules of the following sub-clauses.

(2)P For hoops used as transverse reinforcement in beams, columns or walls, closed stirrups with 135° hooks and extensions of length $10d_{bw}$ shall be used.

(3)P In DCH structures the anchorage length of beam or column bars anchored within beam-column joints shall be measured from a point on the bar at a distance $5d_{bL}$ inside the face of the joint, to take into account the yield penetration due to cyclic post-elastic deformations (for a beam example, see Figure 5.13a).

5.6.2 Anchorage of reinforcement

5.6.2.1 Columns

(1)P When calculating the anchorage or lap length of column bars which contribute to the flexural strength of elements in critical regions, the ratio of the required area of reinforcement over the actual area of reinforcement $A_{s,req}/A_{s,prov}$ shall be assumed to be 1.

(2)P If, under the seismic design situation, the axial force in a column is tensile, the anchorage lengths shall be increased to 50% longer than those specified in EN 1992-1-1:2004.

5.6.2.2 Beams

(1)P The part of beam longitudinal reinforcement bent in joints for anchorage shall always be placed inside the corresponding column hoops.

(2)P To prevent bond failure the diameter of beam longitudinal bars passing through beam-column joints, d_{bL}, shall be limited in accordance with the following expressions:

a) for interior beam-column joints:

Sofort-Download-Beuth-Book Supply Bureau-KdNr.7066075-ID.SCBLGSA1OBPULJD3QN0TD2AJ.1-2016-08-02 13:22:06

SUPPLIED BY BSB EDGE UNDER LICENCE FROM DIN FOR RAJARAMBAPU INSTITUTE OF TECHNOLOGY - SANGLI DIST. VIDE BSB EDGE ORDER REGISTRATION NO. ORD01-1088 ON 02/08/2016

$$\frac{d_{bL}}{h_c} \leq \frac{7{,}5 \cdot f_{ctm}}{\gamma_{Rd} \cdot f_{yd}} \cdot \frac{1 + 0{,}8 \cdot \nu_d}{1 + 0.75 k_D \cdot \rho' / \rho_{max}} \tag{5.50a}$$

b) for exterior beam-column joints:

$$\frac{d_{bL}}{h_c} \leq \frac{7{,}5 \cdot f_{ctm}}{\gamma_{Rd} \cdot f_{yd}} \cdot \left(1 + 0{,}8 \cdot \nu_d\right) \tag{5.50b}$$

where

h_c is the width of the column parallel to the bars;

f_{ctm} is the mean value of the tensile strength of concrete;

f_{yd} is the design value of the yield strength of steel;

ν_d is the normalised design axial force in the column, taken with its minimum value for the seismic design situation ($\nu_d = N_{Ed}/f_{cd} \cdot A_c$);

k_D is the factor reflecting the ductility class equal to 1 for DCH and to 2/3 for DCM;

ρ' is the compression steel ratio of the beam bars passing through the joint;

ρ_{max} is the maximum allowed tension steel ratio (see **5.4.3.1.2(4)** and **5.5.3.1.3(4)**);

γ_{Rd} is the model uncertainty factor on the design value of resistances, taken as being equal to 1,2 or 1,0 respectively for DCH or DCM (due to overstrength owing to strain-hardening of the longitudinal steel in the beam).

The limitations above (expressions (5.50)) do not apply to diagonal bars crossing joints.

(3) If the requirement specified in **(2)**P of this clause cannot be satisfied in exterior beam-column joints because the depth, h_c, of the column parallel to the bars is too shallow, the following additional measures may be taken, to ensure anchorage of the longitudinal reinforcement of beams.

a) The beam or slab may be extended horizontally in the form of exterior stubs (see Figure 5.13a).

b) Headed bars or anchorage plates welded to the end of the bars may be used (see Figure 5.13b).

c) Bends with a minimum length of $10d_{bL}$ and transverse reinforcement placed tightly inside the bend of the bars may be added (see Figure 5.13c).

(4)P Top or bottom bars passing through interior joints, shall terminate in the members framing into the joint at a distance not less than l_{cr} (length of the member critical region, see **5.4.3.1.2(1)**P and **5.5.3.1.3(1)**P) from the face of the joint.

Sofort-Download-Beuth-Book Supply Bureau-KdNr.7066075-ID.SCBLGSA1OBPULJD3QN0TD2AJ.1-2016-08-02 13:22:06

SUPPLIED BY BSB EDGE UNDER LICENCE FROM DIN FOR RAJARAMBAPU INSTITUTE OF TECHNOLOGY - SANGLI DIST. VIDE BSB EDGE ORDER REGISTRATION NO. ORD01-1088 ON 02/08/2016

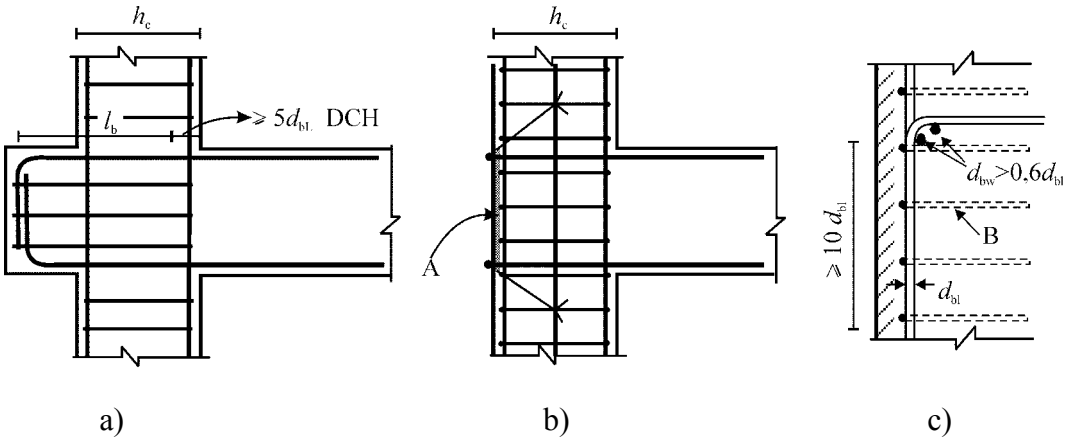

Key

A anchor plate;

B hoops around column bars

Figure 5.13: Additional measures for anchorage in exterior beam-column joints

5.6.3 Splicing of bars

(1)P There shall be no lap-splicing by welding within the critical regions of structural elements.

(2)P There may be splicing by mechanical couplers in columns and walls, if these devices are covered by appropriate testing under conditions compatible with the selected ductility class.

(3)P The transverse reinforcement to be provided within the lap length shall be calculated in accordance with EN 1992-1-1:2004. In addition, the following requirements shall also be met.

a) If the anchored and the continuing bar are arranged in a plane parallel to the transverse reinforcement, the sum of the areas of all spliced bars, ΣA_{sL}, shall be used in the calculation of the transverse reinforcement.

b) If the anchored and the continuing bar are arranged within a plane normal to the transverse reinforcement, the area of transverse reinforcement shall be calculated on the basis of the area of the larger lapped longitudinal bar, A_{sL};

c) The spacing, s, of the transverse reinforcement in the lap zone (in millimetres) shall not exceed

$$s = \min\{h/4; 100\} \tag{5.51}$$

where h is the minimum cross-sectional dimension (in millimetres).

(4) The required area of transverse reinforcement A_{st} within the lap zone of the longitudinal reinforcement of columns spliced at the same location (as defined in EN

Sofort-Download-Beuth-Book Supply Bureau-KdNr.7066075-ID.SCBLGSA1OBPULJD3QN0TD2AJ.1-2016-08-02 13:22:06

SUPPLIED BY BSB EDGE UNDER LICENCE FROM DIN FOR RAJARAMBAPU INSTITUTE OF TECHNOLOGY - SANGLI DIST. VIDE BSB EDGE ORDER REGISTRATION NO. ORD01-1088 ON 02/08/2016

1992-1-1:2004), or of the longitudinal reinforcement of boundary elements in walls, may be calculated from the following expression:

$$A_{st} = s\,(d_{bl}/50)(f_{yld}/f_{ywd}) \tag{5.52}$$

where

A_{st} is the area of one leg of the transverse reinforcement;

d_{bL} is the diameter of the spliced bar;

s is the spacing of the transverse reinforcement;

f_{yld} is the design value of the yield strength of the longitudinal reinforcement;

f_{ywd} is the design value of the yield strength of the transverse reinforcement.

5.7 Design and detailing of secondary seismic elements

(1)P Clause **5.7** applies to elements designated as secondary seismic elements, which are subjected to significant deformations in the seismic design situation (e.g. slab ribs are not subject to the requirements of **5.7**). Such elements shall be designed and detailed to maintain their capacity to support the gravity loads present in the seismic design situation, when subjected to the maximum deformations under the seismic design situation.

(2)P Maximum deformations due to the seismic design situation shall be calculated in accordance with **4.3.4** and shall account for P-Δ effects in accordance with **4.4.2.2(2)** and **(3)**. They shall be calculated from an analysis of the structure in the seismic design situation, in which the contribution of secondary seismic elements to lateral stiffness is neglected and primary seismic elements are modelled with their cracked flexural and shear stiffness.

(3) Secondary seismic elements are deemed to satisfy the requirements of **(1)**P of this subclause if bending moments and shear forces calculated for them on the basis of: a) the deformations of **(2)**P of this subclause; and b) their cracked flexural and shear stiffness, do not exceed their design flexural and shear resistance M_{Rd} and V_{Rd}, respectively, as these are determined on the basis of EN 1992-1-1:2004.

5.8 Concrete foundation elements

5.8.1 Scope

(1)P The following paragraphs apply for the design of concrete foundation elements, such as footings, tie-beams, foundation beams, foundation slabs, foundation walls, pile caps and piles, as well as for connections between such elements, or between them and vertical concrete elements. The design of these elements shall follow the rules of EN 1998-5:2004, **5.4**.

(2)P If design action effects for the design of foundation elements of dissipative structures are derived on the basis of capacity design considerations in accordance with **4.4.2.6(2)**P, no energy dissipation is expected in these elements in the seismic design situation. The design of these elements may follow the rules of **5.3.2(1)**P.

Sofort-Download-Beuth-Book Supply Bureau-KdNr.7066075-ID.SCBLGSA1OBPULJD3QN0TD2AJ.1-2016-08-02 13:22:06

SUPPLIED BY BSB EDGE UNDER LICENCE FROM DIN FOR RAJARAMBAPU INSTITUTE OF TECHNOLOGY - SANGLI DIST. VIDE BSB EDGE ORDER REGISTRATION NO. ORD01-1088 ON 02/08/2016

(3)P If design action effects for foundation elements of dissipative structures are derived on the basis of the analysis for the seismic design situation without the capacity design considerations of **4.4.2.6(2)**P, the design of these elements shall follow the corresponding rules for elements of the superstructure for the selected ductility class. For tie-beams and foundation beams the design shear forces need to be derived on the basis of capacity design considerations, in accordance with **5.4.2.2** in DCM buildings, or to **5.5.2.1(2)**P, **5.5.2.1(3)** in DCH buildings.

(4) If design action effects for foundation elements have been derived using a value of the behaviour factor q that is less than or equal to the upper limit of q for low dissipative behaviour (1,5 in concrete buildings, or between 1,5 and 2,0 in steel or composite steel-concrete buildings, in accordance with Note 1 of Table 6.1 or Note 1 of Table 7.1, respectively), the design of these elements may follow the rules of **5.3.2(1)**P (see also **4.4.2.6(3)**).

(5) In box-type basements of dissipative structures, comprising: a) a concrete slab acting as a rigid diaphragm at basement roof level; b) a foundation slab or a grillage of tie-beams or foundation beams at foundation level, and c) peripheral and/or interior foundation walls, designed in accordance with **(2)**P of this subclause, the columns and beams (including those at the basement roof) are expected to remain elastic under the seismic design situation and may be designed in accordance with **5.3.2(1)**P. Shear walls should be designed for plastic hinge development at the level of the basement roof slab. To this end, in walls which continue with the same cross-section above the basement roof, the critical region should be taken to extend below the basement roof level up to a depth of h_{cr} (see **5.4.3.4.2(1)** and **5.5.3.4.5(1)**). Moreover, the full free height of such walls within the basement should be dimensioned in shear assuming that the wall develops its flexural overstrength $\gamma_{Rd}.M_{Rd}$ (with γ_{Rd}=1,1 for DCM and γ_{Rd}=1,2 for DCH) at the basement roof level and zero moment at the foundation level.

5.8.2 Tie-beams and foundation beams

(1)P Stub columns between the top of a footing or pile cap and the soffit of tie-beams or foundation slabs shall be avoided. To this end, the soffit of tie-beams or foundation slabs shall be below the top of the footing or the pile cap.

(2) Axial forces in tie-beams or tie-zones of foundation slabs in accordance with **5.4.1.2(6)** and **(7)** of EN 1998-5, should be taken in the verification to act together with the action effects derived in accordance with **4.4.2.6(2)**P or **4.4.2.6(3)** for the seismic design situation, taking into account second-order effects.

(3) Tie-beams and foundation beams should have a cross-sectional width of at least $b_{w,min}$ and a cross-sectional depth of at least $h_{w,min}$.

NOTE The values ascribed to $b_{w,min}$ and $h_{w,min}$ for use in a country may be found in its National Annex to this document. The recommended values are: $b_{w,min}$ = 0,25 m and $h_{w,min}$ = 0,4 m for buildings with up to three storeys, or $h_{w,min}$ = 0,5 m for those with four storeys or more above the basement.

(4) Foundation slabs arranged in accordance with EN 1998-5:2004, **5.4.1.2(2)** for the horizontal connection of individual footings or pile caps, should have a thickness of at least t_{min} and a reinforcement ratio of at least $\rho_{s,min}$ at the top and bottom.

Sofort-Download-Beuth-Book Supply Bureau-KdNr.7066075-ID.SCBLGSA1OBPULJD3QN0TD2AJ.1-2016-08-02 13:22:06

SUPPLIED BY BSB EDGE UNDER LICENCE FROM DIN FOR RAJARAMBAPU INSTITUTE OF TECHNOLOGY - SANGLI DIST. VIDE BSB EDGE ORDER REGISTRATION NO. ORD01-1088 ON 02/08/2016

NOTE The values ascribed to t_{min} and $\rho_{s,min}$ for use in a country may be found in its National Annex to this document. The recommended values are: t_{min} = 0,2 m and $\rho_{s,min}$ = 0.2%.

(5) Tie-beams and foundation beams should have along their full length a longitudinal reinforcement ratio of at least $\rho_{b,min}$ at both the top and the bottom.

NOTE The value ascribed to $\rho_{b,min}$ for use in a country may be found in its National Annex to this document. The recommended value of $\rho_{b,min}$ is 0.4%.

5.8.3 Connections of vertical elements with foundation beams or walls

(1)P The common (joint) region of a foundation beam or foundation wall and a vertical element shall follow the rules of **5.4.3.3** or **5.5.3.3** as a beam-column joint region.

(2) If a foundation beam or foundation wall of a DCH structure is designed for action effects derived on the basis of capacity design considerations in accordance with **4.4.2.6(2)**P, the horizontal shear force V_{jhd} in the joint region is derived on the basis of analysis results in accordance with **4.4.2.6(2)**P, **(4)**, **(5)**, and **(6)**.

(3) If the foundation beam or foundation wall of a DCH structure is not designed in accordance with the capacity design approach of **4.4.2.6(4)**, **(5)**, **(6)** (see **5.8.1(3)**P), the horizontal shear force V_{jhd} in the joint region is determined in accordance with **5.5.2.3(2)**, expressions (5.22), (5.23), for beam-column joints.

(4) In DCM structures the connection of foundation beams or foundation walls with vertical elements may follow the rules of **5.4.3.3**.

(5) Bends or hooks at the bottom of longitudinal bars of vertical elements should be oriented so that they induce compression into the connection area.

5.8.4 Cast-in-place concrete piles and pile caps

(1)P The top of the pile up to a distance to the underside of the pile cap of twice the pile cross-sectional dimension, d, as well as the regions up to a distance of $2d$ on each side of an interface between two soil layers with markedly different shear stiffness (ratio of shear moduli greater than 6), shall be detailed as potential plastic hinge regions. To this end, they shall be provided with transverse and confinement reinforcement following the rules for column critical regions of the corresponding ductility class or of at least DCM.

(2)P When the requirement specified in **5.8.1(3)**P is applied for the design of piles of dissipative structures, piles shall be designed and detailed for potential plastic hinging at the head. To this end, the length over which increased transverse and confinement reinforcement is required at the top of the pile in accordance with **(1)**P of this subclause is increased by 50%. Moreover, the ULS verification of the pile in shear shall use a design shear force at least equal to that computed on the basis of **4.4.2.6(4)** to **(8)**.

(3) Piles required to resist tensile forces or assumed as rotationally fixed at the top, should be provided with anchorage in the pile cap to enable the development of the pile design uplift resistance in the soil, or of the design tensile strength of the pile

Sofort-Download-Beuth-Book Supply Bureau-KdNr.7066075-ID.SCBLGSA1OBPULJD3QN0TD2AJ.1-2016-08-02 13:22:06

SUPPLIED BY BSB EDGE UNDER LICENCE FROM DIN FOR RAJARAMBAPU INSTITUTE OF TECHNOLOGY - SANGLI DIST. VIDE BSB EDGE ORDER REGISTRATION NO. ORD01-1088 ON 02/08/2016

reinforcement, whichever is lower. If the part of such piles embedded in the pile cap is cast before the pile cap, dowels should be provided at the interface where the connection occurs.

5.9 Local effects due to masonry or concrete infills

(1) Because of the particular vulnerability of the infill walls of ground floors, a seismically induced irregularity is to be expected there and appropriate measures should be taken. If a more precise method is not used, the entire length of the columns of the ground floor should be considered as the critical length and confined accordingly.

(2) If the height of the infills is smaller than the clear length of the adjacent columns, the following measures should be taken:

a) the entire length of the columns is considered as critical region and should be reinforced with the amount and pattern of stirrups required for critical regions;

b) The consequences of the decrease of the shear span ratio of those columns should be appropriately covered. To this end, **5.4.2.3** and **5.5.2.2** should be applied for the calculation of the acting shear force, depending on the ductility class. In this calculation the clear length of the column, $l_{cl,}$ should be taken equal to the length of the column not in contact with the infills and the moment $M_{i,d}$ at the column section at the top of the infill wall should be taken as being equal to $\gamma_{Rd}.M_{Rc,i}$ with γ_{Rd} =1,1 for DCM and 1,3 for DCH and $M_{Rc,i}$ the design value of the moment of resistance of the column;

c) the transverse reinforcement to resist this shear force should be placed along the length of the column not in contact with the infills and extend along a length h_c (dimension of the column cross-section in the plane of the infill) into the column part in contact with the infills;

d) if the length of the column not in contact with the infills is less than 1,5h_c, the shear force should be resisted by diagonal reinforcement.

(3) Where the infills extend to the entire clear length of the adjacent columns, and there are masonry walls on only one side of the column (e.g. corner columns), the entire length of the column should be considered as a critical region and be reinforced with the amount and pattern of stirrups required for critical regions.

(4) The length, $l_{c,}$ of columns over which the diagonal strut force of the infill is applied, should be verified in shear for the smaller of the following two shear forces: a) the horizontal component of the strut force of the infill, assumed to be equal to the horizontal shear strength of the panel, as estimated on the basis of the shear strength of bed joints; or b) the shear force computed in accordance with **5.4.2.3** or **5.5.2.2**, depending on the ductility class, assuming that the overstrength flexural capacity of the column, $\gamma_{Rd}.M_{Rc,i}$, develops at the two ends of the contact length, l_c. The contact length should be assumed to be equal to the full vertical width of the diagonal strut of the infill. Unless a more accurate estimation of this width is made, taking into account the elastic properties and the geometry of the infill and the column, the strut width may be assumed to be a fixed fraction of the length of the panel diagonal.

Sofort-Download-Beuth-Book Supply Bureau-KdNr.7066075-ID.SCBLGSA1OBPULJD3QN0TD2AJ.1-2016-08-02 13:22:06

SUPPLIED BY BSB EDGE UNDER LICENCE FROM DIN FOR RAJARAMBAPU INSTITUTE OF TECHNOLOGY - SANGLI DIST. VIDE BSB EDGE ORDER REGISTRATION NO. ORD01-1088 ON 02/08/2016

SUPPLIED BY BSB EDGE UNDER LICENCE FROM DIN FOR RAJARAMBAPU INSTITUTE OF TECHNOLOGY - SANGLI DIST. VIDE BSB EDGE ORDER REGISTRATION NO. ORD01-1088 ON 02/08/2016

Sofort-Download-Beuth-Book Supply Bureau-KdNr.7066075-ID.SCBLGSA1OBPULJD3QN0TD2AJ.1-2016-08-02 13:22:06

5.10 Provisions for concrete diaphragms

(1) A solid reinforced concrete slab may be considered to serve as a diaphragm, if it has a thickness of not less than 70 mm and is reinforced in both horizontal directions with at least the minimum reinforcement specified in EN 1992-1-1:2004.

(2) A cast-in-place topping on a precast floor or roof system may be considered as a diaphragm, if: a) it meets the requirements of **(1)** of this subclause; b) it is designed to provide alone the required diaphragm stiffness and resistance; and c) it is cast over a clean, rough substrate, or connected to it through shear connectors.

(3)P The seismic design shall include the ULS verification of reinforced concrete diaphragms in DCH structures with the following properties:

- irregular geometries or divided shapes in plan, diaphragms with recesses and re-entrances;
- irregular and large openings in the diaphragm;
- irregular distribution of masses and/or stiffnesses (as e.g. in the case of set-backs or off-sets);
- basements with walls located only in part of the perimeter or only in part of the ground floor area;

(4) Action-effects in reinforced concrete diaphragms may be estimated by modelling the diaphragm as a deep beam or a plane truss or strut-and-tie model, on elastic supports.

(5) The design values of the action effects should be derived taking into account **4.4.2.5**.

(6) The design resistances should be derived in accordance with EN 1992-1-1:2004.

(7) In cases of core or wall structural systems of DCH, it should be verified that the transfer of the horizontal forces from the diaphragms to the cores or walls has occurred. In this respect the following provisions apply:

a) the design shear stress at the interface of the diaphragm and a core or wall should be limited to $1{,}5f_{ctd}$, to control cracking;

b) an adequate strength to guard against shear sliding failure should be ensured, assuming that the strut inclination is 45°. Additional bars should be provided, contributing to the shear strength of the interface between diaphragms and cores or walls; anchorage of these bars should follow the provisions of **5.6**.

5.11 Precast concrete structures

5.11.1 General

5.11.1.1 Scope and structural types

(1)P Clause **5.11** applies to the seismic design of concrete structures constructed partly or entirely of precast elements.

(2)P Unless otherwise specified (see **5.11.1.3.2(4)**), all provisions of Section **5** of this Eurocode and of EN 1992-1-1:2004, Section **10**, apply.

(3) The following structural types, as defined in **5.1.2** and **5.2.2.1**, are covered by **5.11**:

– frame systems;

– wall systems;

– dual systems (mixed precast frames and precast or monolithic walls).

(4) In addition the following systems are also covered:

– wall panel structures (cross wall structures);

– cell structures (precast monolithic room cell systems).

5.11.1.2 Evaluation of precast structures

(1) In modelling of precast structures, the following evaluations should be made.

a) Identification of the different roles of the structural elements as one of the following:

– those resisting only gravity loads, e.g. hinged columns around a reinforced concrete core;

– those resisting both gravity and seismic loads, e.g. frames or walls;

– those providing adequate connection between structural elements, e.g. floor or roof diaphragms.

b) Ability to fulfil the seismic resistance provisions of **5.1** to **5.10** as follows:

– precast system able to satisfy all those provisions;

– precast systems which are combined with cast-in-situ columns or walls in order to satisfy all those provisions;

– precast systems which deviate from those provisions and, by way of consequence, need additional design criteria and should be assigned lower behaviour factors.

c) Identification of non-structural elements, which may be:

– completely uncoupled from the structure; or

– partially resisting the deformation of structural elements.

d) Identification of the effect of the connections on the energy dissipation capacity of the structure:

– connections located well outside critical regions (as defined in **5.1.2(1)**), not affecting the energy dissipation capacity of the structure (see **5.11.2.1.1** and e.g. Figure 5.14.a);

– connections located within critical regions but adequately over-designed with respect to the rest of the structure, so that in the seismic design situation they remain

Sofort-Download-Beuth-Book Supply Bureau-KdNr.7066075-ID.SCBLGSA1OBPULJD3QN0TD2AJ.1-2016-08-02 13:22:06

SUPPLIED BY BSB EDGE UNDER LICENCE FROM DIN FOR RAJARAMBAPU INSTITUTE OF TECHNOLOGY - SANGLI DIST. VIDE BSB EDGE ORDER REGISTRATION NO. ORD01-1088 ON 02/08/2016

elastic while inelastic response occurs in other critical regions (see **5.11.2.1.2** and e.g. Figure 5.14b);

– [AC⟩ connections located within critical regions with substantial ductility (see **5.11.2.1.3** and e.g. Figure 5.14c) and 5.14d)). ⟨AC]

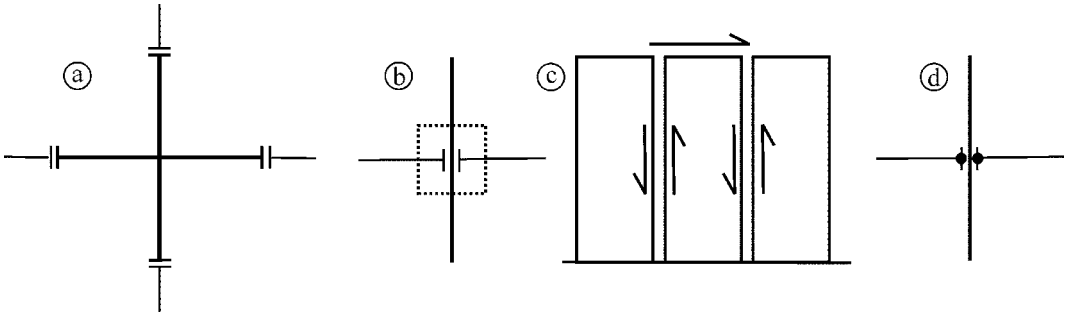

Figure 5.14: a) connection located outside critical regions; b) overdesigned connection with plastic hinges shifted outside the connection; c) ductile shear connections of large panels located within critical regions (e.g. at ground floor); and d) ductile continuity connections located within critical regions of frames

5.11.1.3 Design criteria

5.11.1.3.1 Local resistance

(1) In precast elements and their connections, the possibility of response degradation due to cyclic post-yield deformations should be taken into account. Normally such response degradation is covered by the material partial factors on steel and concrete (see **5.2.4(1)**P and **5.2.4(2)**). If it is not, the design resistance of precast connections under monotonic loading should be appropriately reduced for the verifications in the seismic design situation.

5.11.1.3.2 Energy dissipation

(1) In precast concrete structures the prevailing energy dissipation mechanism should be through plastic rotations within critical regions.

(2) Besides energy dissipation through plastic rotations in critical regions, precast structures can also dissipate energy through plastic shear mechanisms along joints, provided that both of the following conditions are satisfied:

a) the restoring force should not degrade substantially during the seismic action; and

b) the possible instabilities should be appropriately avoided.

(3) The three ductility classes provided in Section **5** for cast-in-place structures apply for precast systems as well. Only **5.2.1(2)** and **5.3** apply from Section **5**, for the design of precast buildings of Ductility Class L.

NOTE The selection of the ductility class for use in the various types of precast concrete systems in a country or the parts of the country may be found in its National Annex of this document. Ductility class L is recommended only for the low-seismicity case. [AC⟩ For wall panel structures the recommended ⟨AC] ductility class is M.

Sofort-Download-Beuth-Book Supply Bureau-KdNr.7066075-ID.SCBLGSA1OBPULJD3QN0TD2AJ.1-2016-08-02 13:22:06

SUPPLIED BY BSB EDGE UNDER LICENCE FROM DIN FOR RAJARAMBAPU INSTITUTE OF TECHNOLOGY - SANGLI DIST. VIDE BSB EDGE ORDER REGISTRATION NO. ORD01-1088 ON 02/08/2016

(4) The capacity of energy dissipation in shear may be taken into account, especially in precast wall systems, by taking into account the values of the local slip-ductility factors, μ_s, in the choice of the overall behaviour factor q.

5.11.1.3.3 Specific additional measures

(1) Only regular precast structures are covered by **5.11** (see **4.2.3**). Nonetheless, the verification of precast elements of irregular structures may be based on the provisions of this subsection.

(2) All vertical structural elements should be extended to the foundation level without a break.

(3) Uncertainties related to resistances are as in **5.2.3.7(2)**P.

(4) Uncertainties related to ductility are as in **5.2.3.7(3)**P.

5.11.1.4 Behaviour factors

(1) For precast-structures observing the provisions of **5.11**, the value of the behaviour factor q_p may be calculated from the following expression, unless special studies allow for deviations:

$$q_p = k_p \cdot q \tag{5.53}$$

where

q is the behaviour factor in accordance with expression (5.1);

k_p is the reduction factor depending on the energy dissipation capacity of the precast structure (see **(2)** of this subclause).

NOTE The values ascribed to k_p for use in a country may be found in its National Annex of this document. The recommended values are:

$$k_p \begin{cases} 1{,}00 & \text{for structures with connection according to 5.11.2.1.1, 5.11.2.1.2, or 5.11.2.1.3} \\ 0{,}5 & \text{for structures with other types of connections} \end{cases}$$

(2) For precast structures not observing the design provisions in **5.11**, the behaviour factor q_p should be assumed to be up to 1,5.

5.11.1.5 Analysis of transient situation

(1) During the erection of the structure, during which temporary bracing should be provided, seismic actions do not have to be taken into account as a design situation. However, whenever the occurrence of an earthquake might produce collapse of parts of the structure with serious risk to human life, temporary bracings should be explicitly designed for an appropriately reduced seismic action.

(2) If not otherwise specified by special studies, this action may be assumed to be equal to a fraction A_p of the design action as defined in Section **3**.

Sofort-Download-Beuth-Book Supply Bureau-KdNr.7066075-ID.SCBLGSA1OBPULJD3QN0TD2AJ.1-2016-08-02 13:22:06

SUPPLIED BY BSB EDGE UNDER LICENCE FROM DIN FOR RAJARAMBAPU INSTITUTE OF TECHNOLOGY - SANGLI DIST. VIDE BSB EDGE ORDER REGISTRATION NO. ORD01-1088 ON 02/08/2016

NOTE The value ascribed to A_p for use in a country may be found in its National Annex of this document. The recommended value of A_p is 30%.

5.11.2 Connections of precast elements

5.11.2.1 General provisions

5.11.2.1.1 Connections located away from critical regions

(1) Connections of precast elements considered to be away from critical regions should be located at a distance from the end face of the closest critical region, at least equal to the largest of the cross-section dimensions of the element where this critical region lies.

(2) Connections of this type should be dimensioned for: a) a shear force determined from the capacity design rule of **5.4.2.2** and **5.4.2.3** with a factor to account for overstrength due to strain-hardening of steel, γ_{Rd}, equal to 1,1 for DCM or to 1,2 for DCH; and b) a bending moment at least equal to the acting moment from the analysis and to 50% of the moment of resistance, M_{Rd}, at the end face of the nearest critical region, multiplied by the factor γ_{Rd}.

5.11.2.1.2 Overdesigned connections

(1) The design action-effects of overdesigned connections should be derived on the basis of the capacity design rules of **5.4.2.2** and **5.4.2.3**, on the basis of overstrength flexural resistances at the end sections of critical regions equal to $\gamma_{Rd}.M_{Rd}$, with the factor γ_{Rd} taken as being equal to 1,20 for DCM and to 1,35 for DCH.

(2) Terminating reinforcing bars of the overdesigned connection should be fully anchored before the end section(s) of the critical region.

(3) The reinforcement of the critical region should be fully anchored outside the overdesigned connection.

5.11.2.1.3 Energy dissipating connections

(1) Such connections should conform to the local ductility criteria in **5.2.3.4** and in the relevant paragraphs of **5.4.3** and **5.5.3**.

(2) Alternatively it should be demonstrated by cyclic inelastic tests of an appropriate number of specimens representative of the connection, that the connection possesses stable cyclic deformation and energy dissipation capacity at least equal to that of a monolithic connection which has the same resistance and conforms to the local ductility provisions of **5.4.3** or **5.5.3**.

(3) Tests on representative specimens should be performed following an appropriate cyclic history of displacements, including at least three full cycles at an amplitude corresponding to q_p in accordance with **5.2.3.4(3)**.

Sofort-Download-Beuth-Book Supply Bureau-KdNr.7066075-ID.SCBLGSA1OBPULJD3QN0TD2AJ.1-2016-08-02 13:22:06

SUPPLIED BY BSB EDGE UNDER LICENCE FROM DIN FOR RAJARAMBAPU INSTITUTE OF TECHNOLOGY - SANGLI DIST. VIDE BSB EDGE ORDER REGISTRATION NO. ORD01-1088 ON 02/08/2016

SUPPLIED BY BSB EDGE UNDER LICENCE FROM DIN FOR RAJARAMBAPU INSTITUTE OF TECHNOLOGY - SANGLI DIST. VIDE BSB EDGE ORDER REGISTRATION NO. ORD01-1088 ON 02/08/2016

Sofort-Download-Beuth-Book Supply Bureau-KdNr.7066075-ID.SCBLGSA1OBPULJD3QN0TD2AJ.1-2016-08-02 13:22:06

5.11.2.2 Evaluation of the resistance of connections

(1) The design resistance of the connections between precast concrete elements should be calculated in accordance with the provisions of EN 1992-1-1:2004, **6.2.5** and of EN 1992-1-1:2004, Section **10**, using the material partial factors of **5.2.4(2)** and **(3)**. If those provisions do not adequately cover the connection under consideration, its resistance should be evaluated by means of appropriate experimental studies.

(2) In evaluating the resistance of a connection against sliding shear, friction resistance due to external compressive stresses (as opposed to the internal stresses due to the clamping effect of bars crossing the connection) should be neglected.

(3) Welding of steel bars in energy dissipating connections may be structurally taken into account when all of the following conditions are met:

a) only weldable steels are used;

b) welding materials, techniques and personnel ensure a loss of local ductility less than 10% of the ductility factor achieved if the connection were implemented without welding.

(4) Steel elements (sections or bars) fastened on concrete members and intended to contribute to the seismic resistance should be analytically and experimentally demonstrated to resist a cyclic loading history of imposed deformation at the target ductility level, as specified in **5.11.2.1.3(2)**.

5.11.3 Elements

5.11.3.1 Beams

(1)P The relevant provisions of EN 1992-1-1:2004, Section **10** and of **5.4.2.1**, **5.4.3.1**, **5.5.2.1**, **5.5.3.1** of this Eurocode apply, in addition to the rules set forth in **5.11**.

(2)P Simply supported precast beams shall be structurally connected to columns or walls. The connection shall ensure the transmission of horizontal forces in the design seismic situation without reliance on friction.

(3) In addition to the relevant provisions of EN 1992-1-1:2004, Section **10**, the tolerance and spalling allowances of the bearings should also be sufficient for the expected displacement of the supporting member (see **4.3.4**).

5.11.3.2 Columns

(1) The relevant provisions of **5.4.3.2** and **5.5.3.2** apply, in addition to the rules set forth in **5.11**.

(2) Column-to-column connections within critical regions are allowed only in DCM.

(3) For precast frame systems with hinged column-to-beam connections, the columns should be fixed at the base with full supports in pocket foundations designed in accordance with **5.11.2.1.2**.

SUPPLIED BY BSB EDGE UNDER LICENCE FROM DIN FOR RAJARAMBAPU INSTITUTE OF TECHNOLOGY - SANGLI DIST. VIDE BSB EDGE ORDER REGISTRATION NO. ORD01-1088 ON 02/08/2016

Sofort-Download-Beuth-Book Supply Bureau-KdNr.7066075-ID.SCBLGSA1OBPULJD3QN0TD2AJ.1-2016-08-02 13:22:06

5.11.3.3 Beam-column joints

(1) Monolithic beam-column joints (see figure 5.14a) should follow the relevant provisions of **5.4.3.3** and **5.5.3.3**.

(2) Connections of beam-ends to columns ▌AC⟩ (see figure 5.14b) and d)) should be specifically ⟨AC▌ checked for their resistance and ductility, as specified in **5.11.2.2.1**.

5.11.3.4 Precast large-panel walls

(1) EN 1992-1-1, Section **10** applies with the following modifications:

a) The total minimum vertical reinforcement ratio refers to the actual cross-sectional area of concrete and should include the vertical bars of the web and the boundary elements;

b) Mesh reinforcement in a single curtain is not allowed;

c) A minimum confinement should be provided to the concrete near the edge of all precast panels, as specified in **5.4.3.4.2** or **5.5.3.4.5** for columns, over a square section of side length b_w, where b_w denotes the thickness of the panel.

(2) The part of the wall panel between a vertical joint and an opening arranged closer than $2{,}5b_w$ to the joint, should be dimensioned and detailed in accordance with **5.4.3.4.2** or **5.5.3.4.5**, depending on the ductility class.

(3) Force-response degradation of the resistance of the connections should be avoided.

(4) To this end, all vertical joints should be rough or provided with shear keys and verified in shear.

(5) Horizontal joints under compression over their entire length may be formed without shear keys. If they are partly in compression and partly in tension, they should be provided with shear keys along the full length.

(6) The following additional rules apply for the verification of horizontal connections of walls consisting of precast large panels:

a) the total tensile force produced by axial (with respect to the wall) action-effects should be taken by vertical reinforcement arranged along the tensile area of the panel and fully anchored in the body of the upper and lower panels. The continuity of this reinforcement should be secured by ductile welding within the horizontal joint or, preferably, within special keys provided for this purpose (Figure 5.15).

b) in horizontal connections which are partly in compression and partly in tension (under the seismic design situation) the shear resistance verification (see **5.11.2.2**) should be made only along the part under compression. In such a case, the value of the axial force N_{Ed} should be replaced by the value of the total compressive force F_c acting on the compression area.

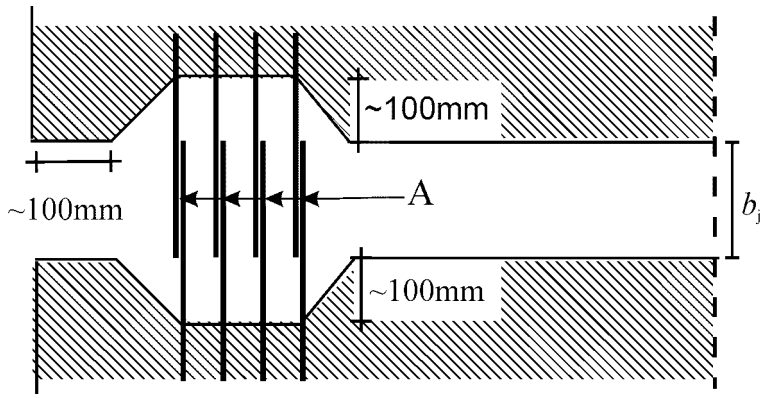

Key

A lap-welding of bars

Figure 5.15: Tensile reinforcement possibly needed at the edge of walls

(7) The following additional design rules should be observed, to enhance local ductility along the vertical connections of large panels:

a) minimum reinforcement should be provided across the connections equal to 0,10% in connections which are fully compressed, and equal to 0,25% in connections which are partly in compression and partly in tension;

b) the amount of reinforcement across the connections should be limited, to avoid abrupt post-peak force response softening. In the absence of more specific evidence, the reinforcement ratio should not exceed 2%;

c) such reinforcement should be distributed across the entire length of the connection. In DCM this reinforcement may be concentrated in three bands (top, middle and bottom);

d) provision should be made to ensure continuity of reinforcement across panel-to-panel connections. To this end, in vertical connections steel bars should be anchored either in the form of loops or (in the case of joints with at least one face free) by welding across the connection (see Figure 5.16);

e) to secure continuity along the connection after cracking, longitudinal reinforcement at a minimum ratio of $\rho_{c,min}$ should be provided within the grout filling the space of the connection (see Figure 5.16).

NOTE The value ascribed to $\rho_{c,min}$ for use in a country may be found in its National Annex to this document. The recommended value is: $\rho_{c,min}$ = 1%.

Sofort-Download-Beuth-Book Supply Bureau-KdNr.7066075-ID.SCBLGSA1OBPULJD3QN0TD2AJ.1-2016-08-02 13:22:06

SUPPLIED BY BSB EDGE UNDER LICENCE FROM DIN FOR RAJARAMBAPU INSTITUTE OF TECHNOLOGY - SANGLI DIST. VIDE BSB EDGE ORDER REGISTRATION NO. ORD01-1088 ON 02/08/2016

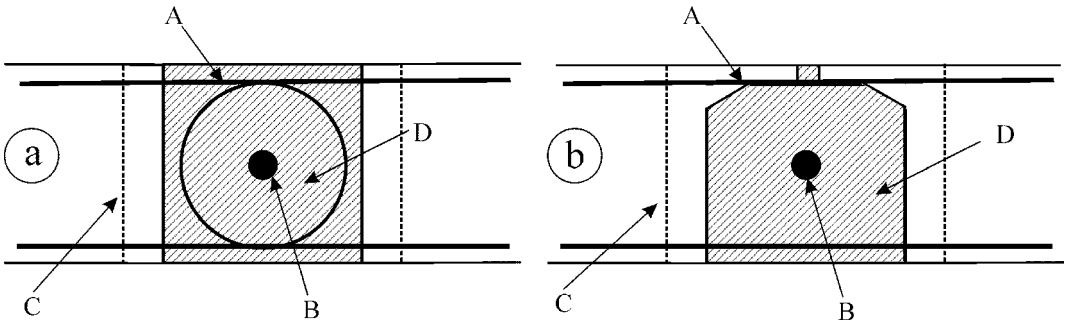

Key

A reinforcement protruding across connection;

B reinforcement along connection;

C shear keys;

D grout filling space between panels.

Figure 5.16: Cross-section of vertical connections between precast large-panels, a) joint with two free faces; b) joint with one free face

(8) As a result of the energy dissipation capacity along the vertical (and in part along the horizontal) connections of large-panels, walls made of such precast panels are exempt from the requirements in **5.4.3.4.2** and **5.5.3.4.5** regarding the confinement of boundary elements.

5.11.3.5 Diaphragms

(1) In addition to the provisions of EN 1992-1-1:2004, Section **10** relevant to slabs and to the provisions of **5.10**, the following design rules also apply in the case of floor diaphragms made of precast elements.

(2) When the rigid diaphragm condition in accordance with **4.3.1(4)** is not satisfied, the in-plane flexibility of the floor as well as of the connections to the vertical elements should be taken into account in the model.

(3) The rigid diaphragm behaviour is enhanced if the joints in the diaphragm are located only over its supports. An appropriate topping of in-situ reinforced concrete can drastically improve the rigidity of the diaphragm. The thickness of this topping layer should be not less than 40 mm if the span between supports is less than 8 m, or not less than 50 mm for longer spans; its mesh reinforcement should be connected to the vertical resisting elements above and below.

(4) Tensile forces should be resisted by steel ties accommodated at least along the perimeter of the diaphragm, as well as along some joints of the precast slab elements. If a cast in-situ topping is used, this additional reinforcement should be located in this topping.

(5) In all cases, these ties should form a continuous system of reinforcement along and across the entire diaphragm and should be appropriately connected to each lateral force resisting element.

Sofort-Download-Beuth-Book Supply Bureau-KdNr.7066075-ID.SCBLGSA1OBPULJD3QN0TD2AJ.1-2016-08-02 13:22:06

SUPPLIED BY BSB EDGE UNDER LICENCE FROM DIN FOR RAJARAMBAPU INSTITUTE OF TECHNOLOGY - SANGLI DIST. VIDE BSB EDGE ORDER REGISTRATION NO. ORD01-1088 ON 02/08/2016

(6) In-plane acting shear forces along slab-to-slab or slab-to-beam connections should be computed with an overdesign factor equal to 1,30. The design resistance should be computed as in **5.11.2.2**.

(7) Primary seismic elements, both above and below the diaphragm, should be adequately connected to the diaphragm. To this end, any horizontal joints should always be properly reinforced. Friction forces due to external compressive forces should not be relied upon.

SUPPLIED BY BSB EDGE UNDER LICENCE FROM DIN FOR RAJARAMBAPU INSTITUTE OF TECHNOLOGY - SANGLI DIST. VIDE BSB EDGE ORDER REGISTRATION NO. ORD01-1088 ON 02/08/2016

Sofort-Download-Beuth-Book Supply Bureau-KdNr.7066075-ID.SCBLGSA1OBPULJD3QN0TD2AJ.1-2016-08-02 13:22:06

SUPPLIED BY BSB EDGE UNDER LICENCE FROM DIN FOR RAJARAMBAPU INSTITUTE OF TECHNOLOGY - SANGLI DIST. VIDE BSB EDGE ORDER REGISTRATION NO. ORD01-1088 ON 02/08/2016

Sofort-Download-Beuth-Book Supply Bureau-KdNr.7066075-ID.SCBLGSA1OBPULJD3QN0TD2AJ.1-2016-08-02 13:22:06

6 SPECIFIC RULES FOR STEEL BUILDINGS

6.1 General

6.1.1 Scope

(1)P For the design of steel buildings, EN 1993 applies. The following rules are additional to those given in EN 1993.

(2)P For buildings with composite steel-concrete structures, Section **7** applies.

6.1.2 Design concepts

(1)P Earthquake resistant steel buildings shall be designed in accordance with one of the following concepts (see Table 6.1):

– Concept a) Low-dissipative structural behaviour;

– Concept b) Dissipative structural behaviour.

Table 6.1: Design concepts, structural ductility classes and upper limit reference values of the behaviour factors

Design concept	Structural ductility class	Range of the reference values of the behaviour factor q
Concept a) Low dissipative structural behaviour	DCL (Low)	≤ 1,5 - 2
Concept b) Dissipative structural behaviour	DCM (Medium)	≤ 4 also limited by the values of Table 6.2
	DCH (High)	only limited by the values of Table 6.2

NOTE 1 The value ascribed to the upper limit of q for low dissipative behaviour, within the range of Table 6.1, for use in a country may be found in its National Annex. The recommended value of the upper limit of q for low-dissipative behaviour is 1,5.

NOTE 2 The National Annex of a particular country may give limitations on the choice of the design concept and of the ductility class which are permissible within that country.

(2)P In concept a) the action effects may be calculated on the basis of an elastic global analysis without taking into account a significant non-linear material behaviour. When using the design spectrum defined in **3.2.2.5**, the upper limit of the reference value of the behaviour factor q may be taken between 1,5 and 2 (see Note 1 to **(1)** of this subclause). In the case of irregularity in elevation the behaviour factor q should be corrected as indicated in **4.2.3.1(7)** but it need not be taken as being smaller than 1,5.

(3) In concept a), if the upper limit of the reference value of q is taken as being larger than 1,5, the primary seismic members of the structure should be of cross-sectional classes 1, 2 or 3.

(4) In concept a), the resistance of the members and of the connections should be evaluated in accordance with EN 1993 without any additional requirements. For buildings which are not seismically isolated (see Section **10**), design in accordance with concept a) is recommended only for low seismicity cases (see **3.2.1(4)**).

(5)P In concept b) the capability of parts of the structure (dissipative zones) to resist earthquake actions through inelastic behaviour is taken into account. When using the design spectrum defined in **3.2.2.5**, the reference value of behaviour factor q may be taken as being greater than the upper limit value established in Table 6.1 and in Note 1 to **(1)** of this subclause for low dissipative structural behaviour. The upper limit value of q depends on the Ductility Class and the structural type (see **6.3**). When adopting this concept b), the requirements given in **6.2** to **6.11** shall be fulfilled.

(6)P Structures designed in accordance with concept b) shall belong to structural ductility classes DCM or DCH. These classes correspond to increased ability of the structure to dissipate energy in plastic mechanisms. Depending on the ductility class, specific requirements in one or more of the following aspects shall be met: class of steel sections and rotational capacity of connections.

6.1.3 Safety verifications

(1)P For ultimate limit state verifications the partial factor for steel $\gamma_s = \gamma_M$ shall take into account the possible strength degradation due to cyclic deformations.

NOTE 1 The National Annex may give a choice of γ_s.

NOTE 2 Assuming that, due to the local ductility provisions, the ratio between the residual strength after degradation and the initial one is roughly equal to the ratio between the γ_M values for accidental and for fundamental load combinations, it is recommended that the partial factor γ_s adopted for the persistent and transient design situations be applied.

(2) In the capacity design checks specified in **6.5** to **6.8**, the possibility that the actual yield strength of steel is higher than the nominal yield strength should be taken into account by a material overstrength factor γ_{ov} (see **6.2(3)**).

6.2 Materials

(1)P Structural steel shall conform to standards referred to in EN 1993.

(2)P The distribution of material properties, such as yield strength and toughness, in the structure shall be such that dissipative zones form where they are intended to in the design.

NOTE Dissipative zones are expected to yield before other zones leave the elastic range during the earthquake.

Sofort-Download-Beuth-Book Supply Bureau-KdNr.7066075-ID.SCBLGSA1OBPULJD3QN0TD2AJ.1-2016-08-02 13:22:06

SUPPLIED BY BSB EDGE UNDER LICENCE FROM DIN FOR RAJARAMBAPU INSTITUTE OF TECHNOLOGY - SANGLI DIST. VIDE BSB EDGE ORDER REGISTRATION NO. ORD01-1088 ON 02/08/2016

(3) The requirement **(2)**P may be satisfied if the yield strength of the steel of dissipative zones and the design of the structure conform to one of the following conditions a), b) or c):

a) ▌AC⟩ the upper value of the yield strength $f_{y,max}$ of the steel ⟨AC▐ of dissipative zones satisfies the following expression $f_{y,max} \leq 1{,}1\gamma_{ov} f_y$

where

γ_{ov} is the overstrength factor used in design; and

f_y is the nominal yield strength specified for the steel grade.

NOTE 1 For steels of grade S235 and with γ_{ov} = 1,25 this method gives a maximum of $f_{y,max}$ = 323 N/mm^2.

NOTE 2 The value ascribed to γ_{ov} for use in a Country to check condition a) may be found in its National Annex. The recommended value is γ_{ov} = 1,25

b) the design of the structure is made on the basis of a single grade and nominal yield strength f_y for the steels both in dissipative and non dissipative zones; an upper value $f_{y,max}$ is specified for the steel of dissipative zones; the nominal value f_y of the steels specified for non dissipative zones and connections exceeds the upper value of the yield strength $f_{y,max}$ of dissipative zones.

NOTE This condition normally leads to the use of steels of grade S355 for non-dissipative members and non dissipative connections (designed on the basis of the f_y of S235 steels) and to the use of steels of grade S235 for dissipative members or connections where the upper yield strengths of steels of grade S235 is limited to $f_{y,max}$ = 355 N/mm^2.

c) the actual yield strength $f_{y,act}$ of the steel of each dissipative zone is determined from measurements and the overstrength factor is computed for each dissipative zone as $\gamma_{ov,act} = f_{y,act}/f_y$, f_y being the nominal yield strength of the steel of dissipative zones.

NOTE This condition is applicable when known steels are taken from stock or to the assessment of existing buildings or where safe side assumptions of yield strength made in design are confirmed by measurements before fabrication.

(4) If the conditions in **(3)**b of this subclause are satisfied, the overstrength factor, $\gamma_{ov,}$ may be taken as being 1,00 in the design checks for structural elements defined in **6.5** to **6.8**. In the verification of expression (6.1) for connections, the value to be used for the overstrength factor γ_{ov} is the same as in **(3)**a).

(5) If the conditions in **(3)**c) of this subclause are satisfied, the overstrength factor γ_{ov} should be taken as the maximum among the $\gamma_{ov,act}$ values computed in the verifications specified in **6.5** to **6.8**.

(6)P For dissipative zones, the value of the yield strength $f_{y,max}$ taken into account in observing the conditions in **(3)** of this subclause should be specified and noted on the drawings.

(7) The toughness of the steels and the welds should satisfy the requirements for the seismic action at the quasi-permanent value of the service temperature ▌AC⟩ (see EN 1993-1-10) ⟨AC▐.

Sofort-Download-Beuth-Book Supply Bureau-KdNr.7066075-ID.SCBLGSA1OBPULJD3QN0TD2AJ.1-2016-08-02 13:22:06

SUPPLIED BY BSB EDGE UNDER LICENCE FROM DIN FOR RAJARAMBAPU INSTITUTE OF TECHNOLOGY - SANGLI DIST. VIDE BSB EDGE ORDER REGISTRATION NO. ORD01-1088 ON 02/08/2016

NOTE The National Annex may give information as to how ▌AC⟩ EN 1993-1-10:2005 ⟨AC▌ may be used in the seismic design situation.

(8) The required toughness of steel and welds and the lowest service temperature adopted in combination with the seismic action should be defined in the project specification.

(9) In bolted connections of primary seismic members of a building, high strength bolts of bolt grade 8.8 or 10.9 should be used.

(10)P The control of material properties shall be made in accordance with **6.11**.

6.3 Structural types and behaviour factors

6.3.1 Structural types

(1)P Steel buildings shall be assigned to one of the following structural types according to the behaviour of their primary resisting structure under seismic actions (see Figures 6.1 to 6.8).

a) Moment resisting frames, are those in which the horizontal forces are mainly resisted by members acting in an essentially flexural manner.

b) Frames with concentric bracings, are those in which the horizontal forces are mainly resisted by members subjected to axial forces.

c) Frames with eccentric bracings, are those in which the horizontal forces are mainly resisted by axially loaded members, but where the eccentricity of the layout is such that energy can be dissipated in seismic links by means of either cyclic bending or cyclic shear.

d) Inverted pendulum structures, are defined in **5.1.2**, and are structures in which dissipative zones are located at the bases of columns.

e) Structures with concrete cores or concrete walls, are those in which horizontal forces are mainly resisted by these cores or walls.

f) Moment resisting frames combined with concentric bracings.

g) Moment resisting frames combined with infills.

(2) In moment resisting frames, the dissipative zones should be mainly located in plastic hinges in the beams or the beam-column joints so that energy is dissipated by means of cyclic bending. The dissipative zones may also be located in columns:

- at the base of the frame;
- at the top of the columns in the upper storey of multi-storey buildings;
- at the top and bottom of columns in single storey buildings in which N_{Ed} in columns conform to the inequality: $N_{Ed} / N_{pl,Rd} < 0,3$.

Sofort-Download-Beuth-Book Supply Bureau-KdNr.7066075-ID.SCBLGSA1OBPULJD3QN0TD2AJ.1-2016-08-02 13:22:06

SUPPLIED BY BSB EDGE UNDER LICENCE FROM DIN FOR RAJARAMBAPU INSTITUTE OF TECHNOLOGY - SANGLI DIST. VIDE BSB EDGE ORDER REGISTRATION NO. ORD01-1088 ON 02/08/2016

(3) In frames with concentric bracings, the dissipative zones should be mainly located in the tensile diagonals.

The bracings may belong to one of the following categories:

- active tension diagonal bracings, in which the horizontal forces can be resisted by the tension diagonals only, neglecting the compression diagonals;
- V bracings, in which the horizontal forces can be resisted by taking into account both tension and compression diagonals. The intersection point of these diagonals lies on a horizontal member which shall be continuous.

K bracings, in which the intersection of the diagonals lies on a column (see Figure 6.9) may not be used.

(4) For frames with eccentric bracings configurations should be used that ensure that all links will be active, as shown in Figure 6.4.

(5) Inverted pendulum structures may be considered as moment resisting frames provided that the earthquake resistant structures possess more than one column in each resisting plane and that the following inequality of the limitation of axial force: $N_{Ed} < 0{,}3\ N_{pl,\,Rd}$ is satisfied in each column.

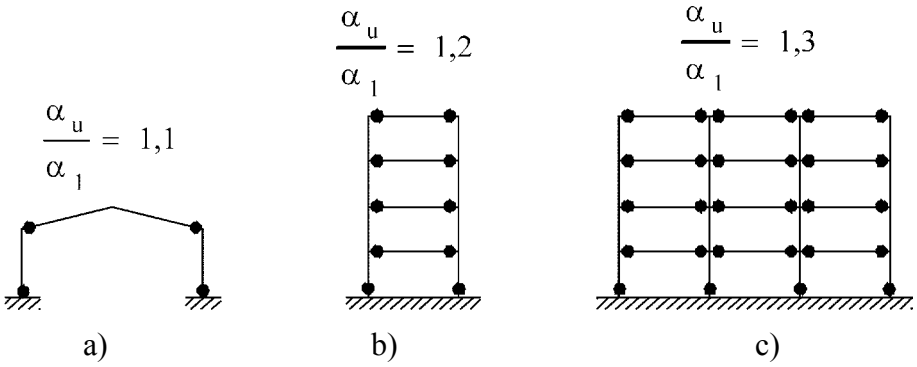

Figure 6.1: Moment resisting frames (dissipative zones in beams and at bottom of columns). Default values for α_u/α_1 (see 6.3.2(3) and Table 6.2).

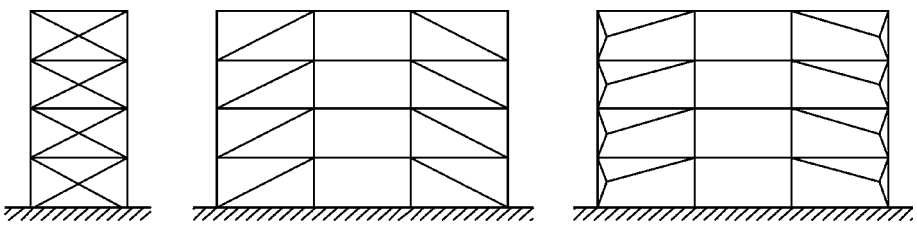

Figure 6.2: Frames with concentric diagonal bracings (dissipative zones in tension diagonals only).

Sofort-Download-Beuth-Book Supply Bureau-KdNr.7066075-ID.SCBLGSA1OBPULJD3QN0TD2AJ.1-2016-08-02 13:22:06

SUPPLIED BY BSB EDGE UNDER LICENCE FROM DIN FOR RAJARAMBAPU INSTITUTE OF TECHNOLOGY - SANGLI DIST. VIDE BSB EDGE ORDER REGISTRATION NO. ORD01-1088 ON 02/08/2016

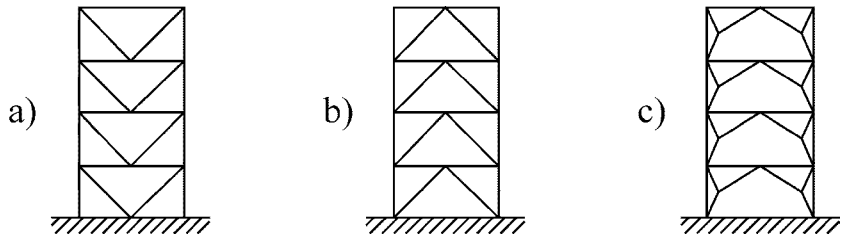

Figure 6.3: Frames with concentric V-bracings (dissipative zones in tension and compression diagonals).

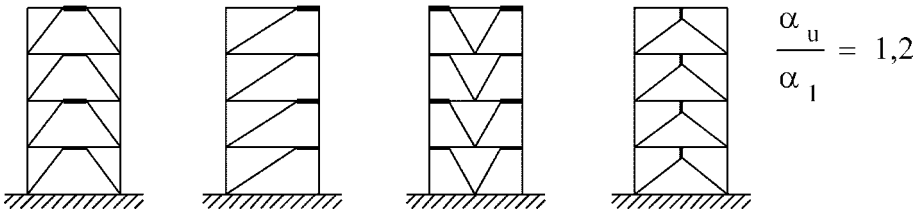

Figure 6.4: Frames with eccentric bracings (dissipative zones in bending or shear links). Default values for α_u/α_1 (see 6.3.2(3) and Table 6.2).

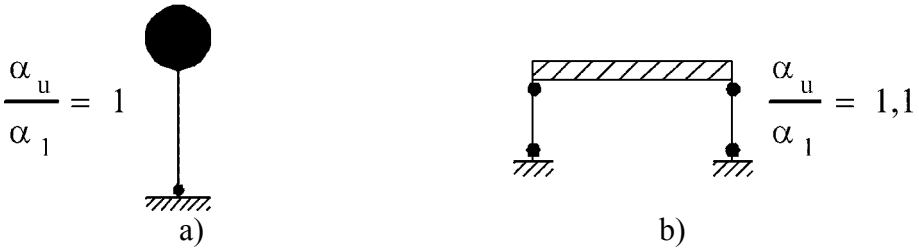

Figure 6.5: Inverted pendulum: a) dissipative zones at the column base; b) dissipative zones in columns ($N_{Ed}/N_{pl,Rd} < 0{,}3$). Default values for α_u/α_1 (see 6.3.2(3) and Table 6.2).

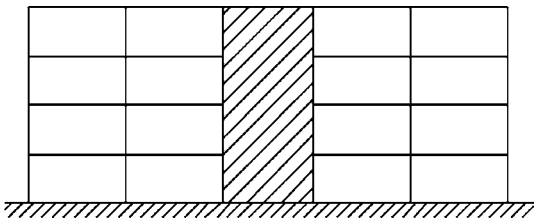

Figure 6.6: Structures with concrete cores or concrete walls.

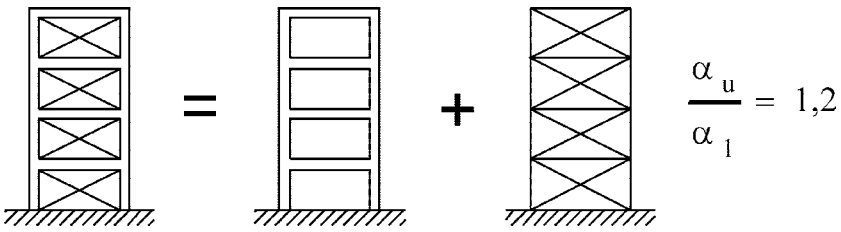

Figure 6.7: Moment resisting frame combined with concentric bracing (dissipative zones in moment frame and in tension diagonals). Default value for α_u/α_1 (see 6.3.2(3) and Table 6.2).

Sofort-Download-Beuth-Book Supply Bureau-KdNr.7066075-ID.SCBLGSA1OBPULJD3QN0TD2AJ.1-2016-08-02 13:22:06

SUPPLIED BY BSB EDGE UNDER LICENCE FROM DIN FOR RAJARAMBAPU INSTITUTE OF TECHNOLOGY - SANGLI DIST. VIDE BSB EDGE ORDER REGISTRATION NO. ORD01-1088 ON 02/08/2016

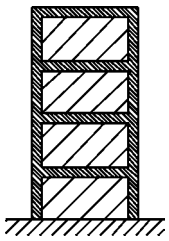

Figure 6.8: Moment resisting frame combined with infills.

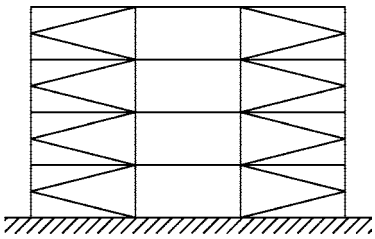

Figure 6.9: Frame with K bracings (not allowed).

6.3.2 Behaviour factors

(1) The behaviour factor q, introduced in **3.2.2.5**, accounts for the energy dissipation capacity of the structure. For regular structural systems, the behaviour factor q should be taken with upper limits to the reference values which are given in Table 6.2, provided that the rules in **6.5** to **6.11** are met.

Table 6.2: Upper limit of reference values of behaviour factors for systems regular in elevation

STRUCTURAL TYPE	Ductility Class	
	DCM	DCH
a) Moment resisting frames	4	$5\alpha_u/\alpha_1$
b) Frame with concentric bracings Diagonal bracings V-bracings	 4 2	 4 2,5
c) Frame with eccentric bracings	4	$5\alpha_u/\alpha_1$
d) Inverted pendulum	2	$2\alpha_u/\alpha_1$
e) Structures with concrete cores or concrete walls	See section **5**	
f) Moment resisting frame with concentric bracing	4	$4\alpha_u/\alpha_1$
g) Moment resisting frames with infills Unconnected concrete or masonry infills, in contact with the frame	2	2
Connected reinforced concrete infills	See section **7**	
Infills isolated from moment frame (see moment frames)	4	$5\alpha_u/\alpha_1$

(2) If the building is non-regular in elevation (see **4.2.3.3**) the upper limit values of q listed in Table 6.2 should be reduced by 20 % (see **4.2.3.1(7)** and Table 4.1).

Sofort-Download-Beuth-Book Supply Bureau-KdNr.7066075-ID.SCBLGSA1OBPULJD3QN0TD2AJ.1-2016-08-02 13:22:06

SUPPLIED BY BSB EDGE UNDER LICENCE FROM DIN FOR RAJARAMBAPU INSTITUTE OF TECHNOLOGY - SANGLI DIST. VIDE BSB EDGE ORDER REGISTRATION NO. ORD01-1088 ON 02/08/2016

(3) For buildings that are regular in plan, if calculations to evaluate α_u/α_1, are not performed, the approximate default values of the ratio α_u/α_1 presented in Figures 6.1 to 6.8 may be used. The parameters α_1 and α_u are defined as follows:

α_1 is the value by which the horizontal seismic design action is multiplied in order to first reach the plastic resistance in any member in the structure, while all other design actions remain constant;

α_u is the value by which the horizontal seismic design action is multiplied, in order to form plastic hinges in a number of sections sufficient for the development of overall structural instability, while all other design actions remain constant. The factor α_u may be obtained from a nonlinear static (pushover) global analysis.

(4) For buildings which are not regular in plan (see **4.2.3.2**), the approximate value of α_u/α_1 that may be used when calculations are not performed for its evaluation are equal to the average of (a) 1,0 and of (b) the value given in Figures 6.1 to 6.8.

(5) Values of α_u/α_1 higher than those specified in **(3)** and **(4)** of this subclause are allowed, provided that they are confirmed by calculation of α_u/α_1 with a nonlinear static (pushover) global analysis.

(6) The maximum value of α_u/α_1 that may be used in a design is equal to 1,6, even if the analysis mentioned in **(5)** of this subclause indicates higher potential values.

6.4 Structural analysis

(1) The design of floor diaphragms should conform to **4.4.2.5**.

(2) Except where otherwise stated in this section (e.g. frames with concentric bracings, see **6.7.2(1)** and **(2)**), the analysis of the structure may be made assuming that all members of the seismic resisting structure are active.

6.5 Design criteria and detailing rules for dissipative structural behaviour common to all structural types

6.5.1 General

(1) The design criteria given in **6.5.2** should be applied to the earthquake-resistant parts of structures designed in accordance with the concept of dissipative structural behaviour.

(2) The design criteria given in **6.5.2** are deemed to be satisfied if the detailing rules given in **6.5.3** to **6.5.5** are followed.

6.5.2 Design criteria for dissipative structures

(1)P Structures with dissipative zones shall be designed such that yielding or local buckling or other phenomena due to hysteretic behaviour do not affect the overall stability of the structure.

NOTE The q factors given in Table 6.2 are deemed to conform to this requirement (see **2.2.2(2)**).

Sofort-Download-Beuth-Book Supply Bureau-KdNr.7066075-ID.SCBLGSA1OBPULJD3QN0TD2AJ.1-2016-08-02 13:22:06

SUPPLIED BY BSB EDGE UNDER LICENCE FROM DIN FOR RAJARAMBAPU INSTITUTE OF TECHNOLOGY - SANGLI DIST. VIDE BSB EDGE ORDER REGISTRATION NO. ORD01-1088 ON 02/08/2016

(2)P Dissipative zones shall have adequate ductility and resistance. The resistance shall be verified in accordance with EN 1993.

(3) Dissipative zones may be located in the structural members or in the connections.

(4)P If dissipative zones are located in the structural members, the non-dissipative parts and the connections of the dissipative parts to the rest of the structure shall have sufficient overstrength to allow the development of cyclic yielding in the dissipative parts.

(5)P When dissipative zones are located in the connections, the connected members shall have sufficient overstrength to allow the development of cyclic yielding in the connections.

6.5.3 Design rules for dissipative elements in compression or bending

(1)P Sufficient local ductility of members which dissipate energy in compression or bending shall be ensured by restricting the width-thickness ratio b/t according to the cross-sectional classes specified in ▌AC⟩ EN 1993-1-1:2005 ⟨AC▐, **5.5**.

(2) Depending on the ductility class and the behaviour factor q used in the design, the requirements regarding the cross-sectional classes of the steel elements which dissipate energy are indicated in Table 6.3

Table 6.3: Requirements on cross-sectional class of dissipative elements depending on Ductility Class and reference behaviour factor

Ductility class	Reference value of behaviour factor q	Required cross-sectional class
DCM	$1{,}5 < q \leq 2$	class 1, 2 or 3
	$2 < q \leq 4$	class 1 or 2
DCH	$q > 4$	class 1

6.5.4 Design rules for parts or elements in tension

(1) For tension members or parts of members in tension, the ductility requirement of ▌AC⟩ EN 1993-1-1:2005 ⟨AC▐, **6.2.3(3)** should be met.

6.5.5 Design rules for connections in dissipative zones

(1)P The design of connections shall be such as to limit localization of plastic strains, high residual stresses and prevent fabrication defects.

(2) Non dissipative connections of dissipative members made by means of full penetration butt welds may be deemed to satisfy the overstrength criterion.

Sofort-Download-Beuth-Book Supply Bureau-KdNr.7066075-ID.SCBLGSA1OBPULJD3QN0TD2AJ.1-2016-08-02 13:22:06

SUPPLIED BY BSB EDGE UNDER LICENCE FROM DIN FOR RAJARAMBAPU INSTITUTE OF TECHNOLOGY - SANGLI DIST. VIDE BSB EDGE ORDER REGISTRATION NO. ORD01-1088 ON 02/08/2016

(3) For fillet weld or bolted non dissipative connections, the following expression should be satisfied:

$$R_d \geq 1{,}1\ \gamma_{ov}\ R_{fy} \tag{6.1}$$

where

R_d is the resistance of the connection in accordance with EN 1993;

R_{fy} is the plastic resistance of the connected dissipative member based on the design yield stress of the material as defined in EN 1993.

γ_{ov} is the overstrength factor (see **6.1.3(2)** and **6.2**).

(4) Categories *B* and *C* of bolted joints in shear in accordance with ▌AC⟩ EN 1993-1-8:2005 ⟨AC▐, **3.4.1** and category *E* of bolted joints in tension in accordance with ▌AC⟩ EN 1993-1-8:2005 ⟨AC▐, **3.4.2** should be used. Shear joints with fitted bolts are also allowed. Friction surfaces should belong to class A or B as defined in ▌AC⟩ in EN 1090-2 ⟨AC▐.

(5) For bolted shear connections, the design shear resistance of the bolts should be higher than 1,2 times the design bearing resistance.

(6) The adequacy of design should be supported by experimental evidence whereby strength and ductility of members and their connections under cyclic loading should be supported by experimental evidence, in order to conform to the specific requirements defined in **6.6** to **6.9** for each structural type and structural ductility class. This applies to partial and full strength connections in or adjacent to dissipative zones.

(7) Experimental evidence may be based on existing data. Otherwise, tests should be performed.

NOTE The National Annex may provide reference to complementary rules on acceptable connection design.

6.6 Design and detailing rules for moment resisting frames

6.6.1 Design criteria

(1)P Moment resisting frames shall be designed so that plastic hinges form in the beams or in the connections of the beams to the columns, but not in the columns, in accordance with **4.4.2.3**. This requirement is waived at the base of the frame, at the top level of multi-storey buildings and for single storey buildings.

(2)P Depending on the location of the dissipative zones, either **6.5.2(4)**P or **6.5.2(5)**P applies.

(3) The required hinge formation pattern should be achieved by conforming to **4.4.2.3**, **6.6.2**, **6.6.3** and **6.6.4**.

6.6.2 Beams

(1) Beams should be verified as having sufficient resistance against lateral and lateral torsional buckling in accordance with EN 1993, assuming the formation of a

Sofort-Download-Beuth-Book Supply Bureau-KdNr.7066075-ID.SCBLGSA1OBPULJD3QN0TD2AJ.1-2016-08-02 13:22:06

SUPPLIED BY BSB EDGE UNDER LICENCE FROM DIN FOR RAJARAMBAPU INSTITUTE OF TECHNOLOGY - SANGLI DIST. VIDE BSB EDGE ORDER REGISTRATION NO. ORD01-1088 ON 02/08/2016

plastic hinge at one end of the beam. The beam end that should be considered is the most stressed end in the seismic design situation.

(2) For plastic hinges in the beams it should be verified that the full plastic moment of resistance and rotation capacity are not decreased by compression and shear forces. To this end, for sections belonging to cross-sectional classes 1 and 2, the following inequalities should be verified at the location where the formation of hinges is expected:

$$\frac{M_{\mathrm{Ed}}}{M_{\mathrm{pl,Rd}}} \leq 1{,}0 \tag{6.2}$$

$$\frac{N_{\mathrm{Ed}}}{N_{\mathrm{pl,Rd}}} \leq 0{,}15 \tag{6.3}$$

$$\frac{V_{\mathrm{Ed}}}{V_{\mathrm{pl,Rd}}} \leq 0{,}5 \tag{6.4}$$

where

$$V_{\mathrm{Ed}} = V_{\mathrm{Ed,G}} + V_{\mathrm{Ed,M}}\,; \tag{6.5}$$

N_{Ed} is the design axial force;

M_{Ed} is the design bending moment;

V_{Ed} is the design shear;

$N_{\mathrm{pl,\,Rd}}$, $M_{\mathrm{pl,\,Rd}}$, $V_{\mathrm{pl,\,Rd}}$ are design resistances in accordance with EN 1993;

$V_{\mathrm{Ed,G}}$ is the design value of the shear force due to the non seismic actions;

$V_{\mathrm{Ed,M}}$ is the design value of the shear force due to the application of the plastic moments $M_{\mathrm{pl,Rd,A}}$ and $M_{\mathrm{pl,Rd,B}}$ with opposite signs at the end sections A and B of the beam.

NOTE $V_{\mathrm{Ed,M}} = (M_{\mathrm{pl,Rd,A}}+M_{\mathrm{pl,Rd,B}})/L$ is the most unfavourable condition, corresponding to a beam with span L and dissipative zones at both ends.

(3) For sections belonging to cross-sectional class 3, expressions (6.2) to (6.5) should be checked replacing $N_{\mathrm{pl,\,Rd}}$, $M_{\mathrm{pl,\,Rd}}$, $V_{\mathrm{pl,\,Rd}}$ with $N_{\mathrm{el,\,Rd}}$, $M_{\mathrm{el,\,Rd}}$, $V_{\mathrm{el,\,Rd}}$.

(4) If the condition in expression (6.3) is not verified, the requirement specified in **(2)** of this subclause is deemed to be satisfied if the provisions of ▌AC⟩ EN 1993-1-1:2005 ⟨AC▐, **6.2.9.1** are satisfied.

6.6.3 Columns

(1)P The columns shall be verified in compression considering the most unfavourable combination of the axial force and bending moments. In the checks, N_{Ed}, M_{Ed}, V_{Ed} should be computed as:

Sofort-Download-Beuth-Book Supply Bureau-KdNr.7066075-ID.SCBLGSA1OBPULJD3QN0TD2AJ.1-2016-08-02 13:22:06

SUPPLIED BY BSB EDGE UNDER LICENCE FROM DIN FOR RAJARAMBAPU INSTITUTE OF TECHNOLOGY - SANGLI DIST. VIDE BSB EDGE ORDER REGISTRATION NO. ORD01-1088 ON 02/08/2016

$$N_{Ed} = N_{Ed,G} + 1{,}1\gamma_{ov}\,\Omega N_{Ed,E}$$
$$M_{Ed} = M_{Ed,G} + 1{,}1\gamma_{ov}\,\Omega M_{Ed,E} \qquad (6.6)$$
$$V_{Ed} = V_{Ed,G} + 1{,}1\gamma_{ov}\,\Omega V_{Ed,E}$$

where

$N_{Ed,G}$ ($M_{Ed,G}$, $V_{Ed,G}$) are the compression force (respectively the bending moment and shear force) in the column due to the non-seismic actions included in the combination of actions for the seismic design situation;

$N_{Ed,E}$ ($M_{Ed,E}$, $V_{Ed,E}$) are the compression force (respectively the bending moment and shear force) in the column due to the design seismic action;

γ_{ov} is the overstrength factor (see **6.1.3(2)** and **6.2(3)**)

Ω is the minimum value of $\Omega_i = M_{pl,Rd,i}/M_{Ed,i}$ of all beams in which dissipative zones are located; $M_{Ed,i}$ is the design value of the bending moment in beam *i* in the seismic design situation and $M_{pl,Rd,i}$.is the corresponding plastic moment.

(2) In columns where plastic hinges form as stated in **6.6.1(1)**P, the verification should take into account that in these plastic hinges the acting moment is equal to $M_{pl,Rd}$.

(3) The resistance verification of the columns should be made in accordance with ▌AC⟩ EN 1993-1-1:2005 ⟨AC▐, Section **6**.

(4) The column shear force V_{Ed} resulting from the structural analysis should satisfy the following expression :

$$\frac{V_{Ed}}{V_{pl,Rd}} \le 0{,}5 \qquad (6.7)$$

(5) The transfer of the forces from the beams to the columns should ▌AC⟩ conform to the design rules given in EN 1993-1-8:2005, Section **6** ⟨AC▐.

(6) The shear resistance of framed web panels of beam/column connections (see Figure 6.10) should satisfy the following expression:

$$\frac{V_{wp,Ed}}{V_{wp,Rd}} \le 1{,}0 \qquad (6.8)$$

where

$V_{wp,Ed}$ is the design shear force in the web panel due to the action effects, taking into account the plastic resistance of the adjacent dissipative zones in beams or connections;

$V_{wp,Rd}$ is the shear resistance of the web panel in accordance ▌AC⟩ with EN 1993-1-8:2005, **6.2.6.1** ⟨AC▐. It is not required to take into account the effect of the stresses of the axial force and bending moment on the plastic resistance in shear.

Sofort-Download-Beuth-Book Supply Bureau-KdNr.7066075-ID.SCBLGSA1OBPULJD3QN0TD2AJ.1-2016-08-02 13:22:06

SUPPLIED BY BSB EDGE UNDER LICENCE FROM DIN FOR RAJARAMBAPU INSTITUTE OF TECHNOLOGY - SANGLI DIST. VIDE BSB EDGE ORDER REGISTRATION NO. ORD01-1088 ON 02/08/2016

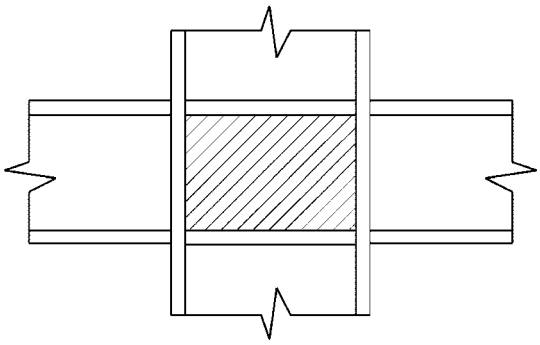

Figure 6.10: Web panel framed by flanges and stiffeners

(7) The shear buckling resistance of the web panels should also be checked to ensure that it conforms to ⟨AC⟩ EN 1993-1-5:2006 ⟨AC⟩, Section **5**:

$$V_{wp,Ed} < V_{wb,Rd} \tag{6.9}$$

where

$V_{wb,Rd}$ is the shear buckling resistance of the web panel.

6.6.4 Beam to column connections

(1) If the structure is designed to dissipate energy in the beams, the connections of the beams to the columns should be designed for the required degree of overstrength (see **6.5.5**) taking into account the moment of resistance $M_{pl,Rd}$ and the shear force ($V_{Ed,G}$ + $V_{Ed,M}$) evaluated in **6.6.2**.

(2) Dissipative semi-rigid and/or partial strength connections are permitted, provided that all of the following requirements are verified:

a) the connections have a rotation capacity consistent with the global deformations;

b) members framing into the connections are demonstrated to be stable at the ultimate limit state (ULS);

c) the effect of connection deformation on global drift is taken into account using non-linear static (pushover) global analysis or non-linear time history analysis.

(3) The connection design should be such that the rotation capacity of the plastic hinge region θ_p is not less than 35 mrad for structures of ductility class DCH and 25 mrad for structures of ductility class DCM with $q > 2$. The rotation θ_p is defined as

$$\theta_p = \delta / 0{,}5L \tag{6.10}$$

where (see Figure 6.11):

δ is the beam deflection at midspan ;

L is the beam span

Sofort-Download-Beuth-Book Supply Bureau-KdNr.7066075-ID.SCBLGSA1OBPULJD3QN0TD2AJ.1-2016-08-02 13:22:06

SUPPLIED BY BSB EDGE UNDER LICENCE FROM DIN FOR RAJARAMBAPU INSTITUTE OF TECHNOLOGY - SANGLI DIST. VIDE BSB EDGE ORDER REGISTRATION NO. ORD01-1088 ON 02/08/2016

The rotation capacity of the plastic hinge region θ_p should be ensured under cyclic loading without degradation of strength and stiffness greater than 20%. This requirement is valid independently of the intended location of the dissipative zones.

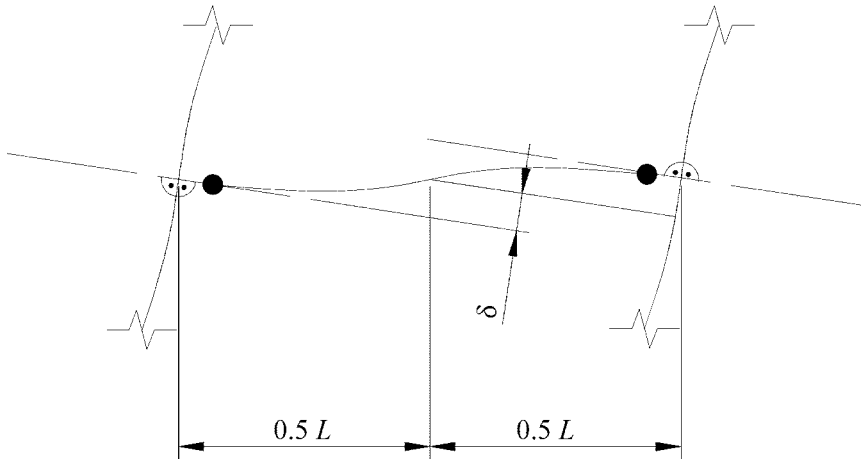

Figure 6.11: Beam deflection for the calculation of θ_p.

(4) In experiments made to assess θ_p the column web panel shear resistance should conform to expression (6.8) and the column web panel shear deformation should not contribute for more than 30% of the plastic rotation capability θ_p.

(5) The column elastic deformation should not be included in the evaluation of θ_p.

(6) When partial strength connections are used, the column capacity design should be derived from the plastic capacity of the connections.

6.7 Design and detailing rules for frames with concentric bracings

6.7.1 Design criteria

(1)P Concentric braced frames shall be designed so that yielding of the diagonals in tension will take place before failure of the connections and before yielding or buckling of the beams or columns.

(2)P The diagonal elements of bracings shall be placed in such a way that the structure exhibits similar load deflection characteristics at each storey in opposite senses of the same braced direction under load reversals.

(3) To this end, the following rule should be met at every storey:

$$\frac{\left|A^{+} - A^{-}\right|}{A^{+} + A^{-}} \leq 0,05 \qquad (6.11)$$

where A^{+} and A^{-} are the areas of the horizontal projections of the cross-sections of the tension diagonals, when the horizontal seismic actions have a positive or negative direction respectively (see Figure 6.12).

Sofort-Download-Beuth-Book Supply Bureau-KdNr.7066075-ID.SCBLGSA1OBPULJD3QN0TD2AJ.1-2016-08-02 13:22:06

SUPPLIED BY BSB EDGE UNDER LICENCE FROM DIN FOR RAJARAMBAPU INSTITUTE OF TECHNOLOGY - SANGLI DIST. VIDE BSB EDGE ORDER REGISTRATION NO. ORD01-1088 ON 02/08/2016

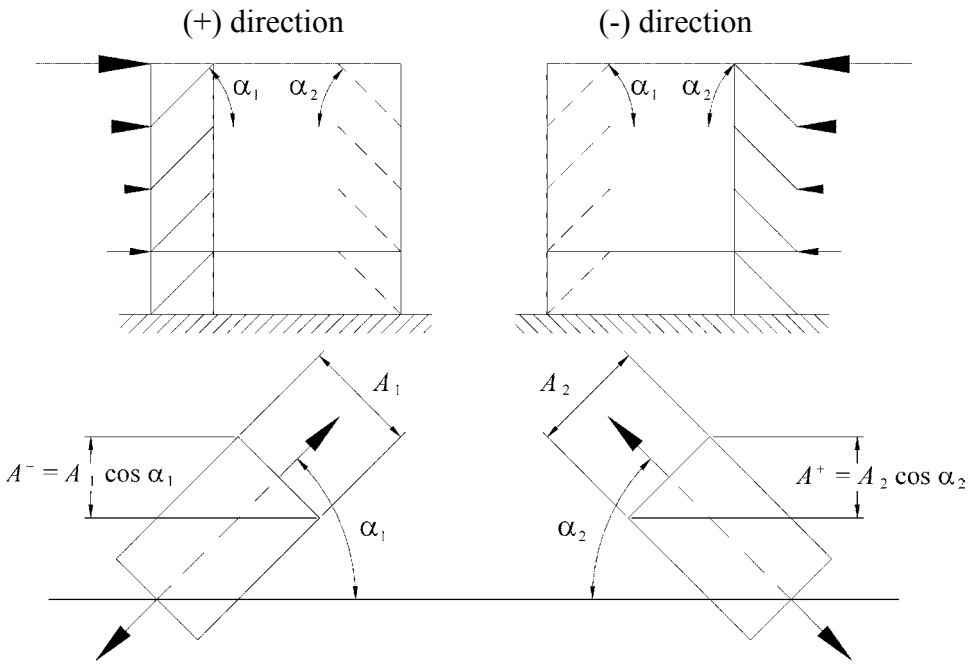

Figure 6.12: Example of application of 6.7.1(3)

6.7.2 Analysis

(1)P Under gravity load conditions, only beams and columns shall be considered to resist such loads, without taking into account the bracing members.

(2)P The diagonals shall be taken into account as follows in an elastic analysis of the structure for the seismic action:

- in frames with diagonal bracings, only the tension diagonals shall be taken into account;
- in frames with V bracings, both the tension and compression diagonals shall be taken into account.

(3) Taking into account of both tension and compression diagonals in the analysis of any type of concentric bracing is allowed provided that all of the following conditions are satisfied:

a) a non-linear static (pushover) global analysis or non-linear time history analysis is used;

b) both pre-buckling and post-buckling situations are taken into account in the modelling of the behaviour of diagonals and;

c) background information justifying the model used to represent the behaviour of diagonals is provided.

Sofort-Download-Beuth-Book Supply Bureau-KdNr.7066075-ID.SCBLGSA1OBPULJD3QN0TD2AJ.1-2016-08-02 13:22:06

SUPPLIED BY BSB EDGE UNDER LICENCE FROM DIN FOR RAJARAMBAPU INSTITUTE OF TECHNOLOGY - SANGLI DIST. VIDE BSB EDGE ORDER REGISTRATION NO. ORD01-1088 ON 02/08/2016

6.7.3 Diagonal members

(1) In frames with X diagonal bracings, the non-dimensional slenderness $\bar{\lambda}$ as defined in [AC⟩ EN 1993-1-1:2005 ⟨AC] should be limited to: $1{,}3 < \bar{\lambda} \leq 2{,}0$.

NOTE The 1,3 limit is defined to avoid overloading columns in the prebuckling stage (when both compression and tension diagonals are active) beyond the action effects obtained from an analysis at the ultimate stage where only the tension diagonal is taken as active.

(2) In frames with diagonal bracings in which the diagonals are not positioned as X diagonal bracings (see for instance Figure 6.12), the non-dimensional slenderness $\bar{\lambda}$ should be less than or equal to 2,0.

(3) In frames with V bracings, the non-dimensional slenderness $\bar{\lambda}$ should be less than or equal to 2,0.

(4) In structures of up to two storeys, no limitation applies to $\bar{\lambda}$.

(5) The yield resistance $N_{\mathrm{pl,Rd}}$ of the gross cross-section of the diagonals should be such that $N_{\mathrm{pl,Rd}} \geq N_{\mathrm{Ed}}$.

(6) In frames with V bracings, the compression diagonals should be designed for the compression resistance in accordance with EN 1993.

(7) The connections of the diagonals to any member should satisfy the design rules of **6.5.5**.

(8) In order to satisfy a homogeneous dissipative behaviour of the diagonals, it should be checked that the maximum overstrength Ω_{i} defined in **6.7.4(1)** does not differ from the minimum value Ω by more than 25%.

(9) Dissipative semi-rigid and/or partial strength connections are permitted, provided that all of the following conditions are satisfied:

a) the connections have an elongation capacity consistent with global deformations;

b) the effect of connections deformation on global drift is taken into account using non-linear static (pushover) global analysis or non-linear time history analysis.

6.7.4 Beams and columns

(1) Beams and columns with axial forces should meet the following minimum resistance requirement:

$$N_{\mathrm{pl,Rd}}(M_{\mathrm{Ed}}) \geq N_{\mathrm{Ed,G}} + 1{,}1\gamma_{\mathrm{ov}}\,\Omega.N_{\mathrm{Ed,E}} \tag{6.12}$$

where

$N_{\mathrm{pl,Rd}}(M_{\mathrm{Ed}})$ is the design buckling resistance of the beam or the column in accordance with EN 1993, taking into account the interaction of the buckling

Sofort-Download-Beuth-Book Supply Bureau-KdNr.7066075-ID.SCBLGSA1OBPULJD3QN0TD2AJ.1-2016-08-02 13:22:06

SUPPLIED BY BSB EDGE UNDER LICENCE FROM DIN FOR RAJARAMBAPU INSTITUTE OF TECHNOLOGY - SANGLI DIST. VIDE BSB EDGE ORDER REGISTRATION NO. ORD01-1088 ON 02/08/2016

resistance with the bending moment M_{Ed}, defined as its design value in the seismic design situation;

$N_{Ed,G}$ is the axial force in the beam or in the column due to the non-seismic actions included in the combination of actions for the seismic design situation;

$N_{Ed,E}$ is the axial force in the beam or in the column due to the design seismic action;

γ_{ov} is the overstrength factor (see **6.1.3(2)** and **6.2(3)**)

Ω is the minimum value of $\Omega_i = N_{pl,Rd,i}/N_{Ed,i}$ over all the diagonals of the braced frame system; where

$N_{pl,Rd,i}$ is the design resistance of diagonal i;

$N_{Ed,i}$ is the design value of the axial force in the same diagonal i in the seismic design situation.

(2) In frames with V bracings, the beams should be designed to resist:

– all non-seismic actions without considering the intermediate support given by the diagonals;

– the unbalanced vertical seismic action effect applied to the beam by the braces after buckling of the compression diagonal. This action effect is calculated using $N_{pl,Rd}$ for the brace in tension and $\gamma_{pb}\ N_{pl,Rd}$ for the brace in compression.

NOTE 1 The factor γ_{pb} is used for the estimation of the post buckling resistance of diagonals in compression.

NOTE 2 The value ascribed to γ_{pb} for use in a country may be found in its National Annex to this document. The recommended value is 0,3.

(3)P In frames with diagonal bracings in which the tension and compression diagonals are not intersecting (e.g. diagonals of Figure 6.12), the design should take into account the tensile and compression forces which develop in the columns adjacent to the diagonals in compression and correspond to compression forces in these diagonals equal to their design buckling resistance.

6.8 Design and detailing rules for frames with eccentric bracings

6.8.1 Design criteria

(1)P Frames with eccentric bracings shall be designed so that specific elements or parts of elements called seismic links are able to dissipate energy by the formation of plastic bending and/or plastic shear mechanisms.

(2)P The structural system shall be designed so that a homogeneous dissipative behaviour of the whole set of seismic links is realised.

NOTE The rules given hereafter are intended to ensure that yielding, including strain hardening effects in the plastic hinges or shear panels, will take place in the links prior to any yielding or failure elsewhere.

(3) Seismic links may be horizontal or vertical components (see Figure 6.4).

Sofort-Download-Beuth-Book Supply Bureau-KdNr.7066075-ID.SCBLGSA1OBPULJD3QN0TD2AJ.1-2016-08-02 13:22:06

SUPPLIED BY BSB EDGE UNDER LICENCE FROM DIN FOR RAJARAMBAPU INSTITUTE OF TECHNOLOGY - SANGLI DIST. VIDE BSB EDGE ORDER REGISTRATION NO. ORD01-1088 ON 02/08/2016

6.8.2 Seismic links

(1) The web of a link should be of single thickness without doubler plate reinforcement and without a hole or penetration.

(2) Seismic links are classified into 3 categories according to the type of plastic mechanism developed:

– short links, which dissipate energy by yielding essentially in shear;

– long links, which dissipate energy by yielding essentially in bending;

– intermediate links, in which the plastic mechanism involves bending and shear.

(3) For I sections, the following parameters are used to define the design resistances and limits of categories:

$$M_{p,link} = f_y\, b\, t_f\, (d\text{-}t_f) \tag{6.13}$$

$$V_{p,link} = (f_y/\sqrt{3})\, t_w\, (d - t_f) \tag{6.14}$$

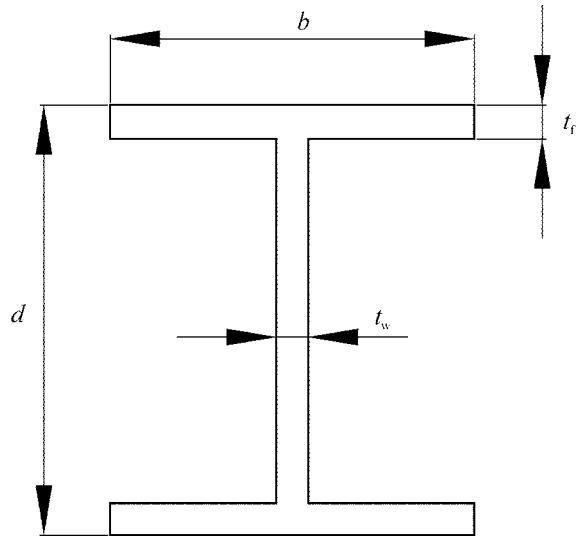

Figure 6.13: Definition of symbols for I link sections

(4) If $N_{Ed}/N_{pl,Rd} \leq 0{,}15$, the design resistance of the link should satisfy both of the following relationships at both ends of the link:

$$V_{Ed} \leq V_{p,link} \tag{6.15}$$

$$M_{Ed} \leq M_{p,link} \tag{6.16}$$

where

N_{Ed}, M_{Ed}, V_{Ed} are the design action effects, respectively the design axial force, design bending moment and design shear, at both ends of the link.

(5) If $N_{Ed}/N_{Rd} > 0{,}15$, expressions (6.15), (6.16) should be satisfied with the following reduced values $V_{p,link,r}$ and $M_{p,link,r}$ used instead of $V_{p,link}$ and $M_{p,link}$

Sofort-Download-Beuth-Book Supply Bureau-KdNr.7066075-ID.SCBLGSA1OBPULJD3QN0TD2AJ.1-2016-08-02 13:22:06

SUPPLIED BY BSB EDGE UNDER LICENCE FROM DIN FOR RAJARAMBAPU INSTITUTE OF TECHNOLOGY - SANGLI DIST. VIDE BSB EDGE ORDER REGISTRATION NO. ORD01-1088 ON 02/08/2016

$$V_{\mathrm{p,link,r}} = V_{\mathrm{p,link}}\left[1-\left(N_{\mathrm{Ed}} / N_{\mathrm{pl,Rd}}\right)^2\right]^{0,5} \tag{6.17}$$

$$M_{\mathrm{p,link,r}} = M_{\mathrm{p,link}}\left[1-\left(N_{\mathrm{Ed}} / N_{\mathrm{pl,Rd}}\right)\right] \tag{6.18}$$

(6) If $N_{\mathrm{Ed}}/N_{\mathrm{Rd}} \geq 0{,}15$, the link length e should not exceed:

$$e \leq 1{,}6\ M_{\mathrm{p,link}}/V_{\mathrm{p,link}} \quad \text{when } R < 0{,}3, \tag{6.19}$$

or

$$e \leq (1{,}15 - 0{,}5\ R)\ 1{,}6\ M_{\mathrm{p,link}}/V_{\mathrm{p,link}} \quad \text{when } R \geq 0{,}3 \tag{6.20}$$

where $R = N_{\mathrm{Ed}}.t_{\mathrm{w}}.(d - 2t_{\mathrm{f}}) / (V_{\mathrm{Ed}}.A)$, in which A is the gross area of the link.

(7) To achieve a global dissipative behaviour of the structure, it should be checked that the individual values of the ratios Ω_{i} defined in **6.8.3(1)** do not exceed the minimum value Ω resulting from **6.8.3(1)** by more than 25% of this minimum value.

(8) In designs where equal moments would form simultaneously at both ends of the link (see Figure 6.14.a), links may be classified according to the length e. For I sections, the categories are:

– short links $e < e_{\mathrm{s}} = 1{,}6\ M_{\mathrm{p,link}}/V_{\mathrm{p,link}}$ (6.21)

– long links $e > e_{\mathrm{L}} = 3{,}0\ M_{\mathrm{p,link}}/V_{\mathrm{p,link}}$ (6.22)

– intermediate links $e_{\mathrm{s}} < e < e_{\mathrm{L}}$ (6.23)

(9) In designs where only one plastic hinge would form at one end of the link (see Figure 6.14.b), the value of the length e defines the categories of the links.For I sections the categories are:

– short links $e < e_{\mathrm{s}} = 0{,}8\ (1+\alpha)\ M_{\mathrm{p,link}}/V_{\mathrm{p,link}}$ (6.24)

– long links $e > e_{\mathrm{L}} = 1{,}5\ (1+\alpha)\ M_{\mathrm{p,link}}/V_{\mathrm{p,link}}$ (6.25)

– intermediate links $e_{\mathrm{s}} < e < e_{\mathrm{L}}$. (6.26)

where α is the ratio of the smaller bending moments $M_{\mathrm{Ed,A}}$ at one end of the link in the seismic design situation, to the greater bending moments $M_{\mathrm{Ed,B}}$ at the end where the plastic hinge would form, both moments being taken as absolute values.

Sofort-Download-Beuth-Book Supply Bureau-KdNr.7066075-ID.SCBLGSA1OBPULJD3QN0TD2AJ.1-2016-08-02 13:22:06

SUPPLIED BY BSB EDGE UNDER LICENCE FROM DIN FOR RAJARAMBAPU INSTITUTE OF TECHNOLOGY - SANGLI DIST. VIDE BSB EDGE ORDER REGISTRATION NO. ORD01-1088 ON 02/08/2016

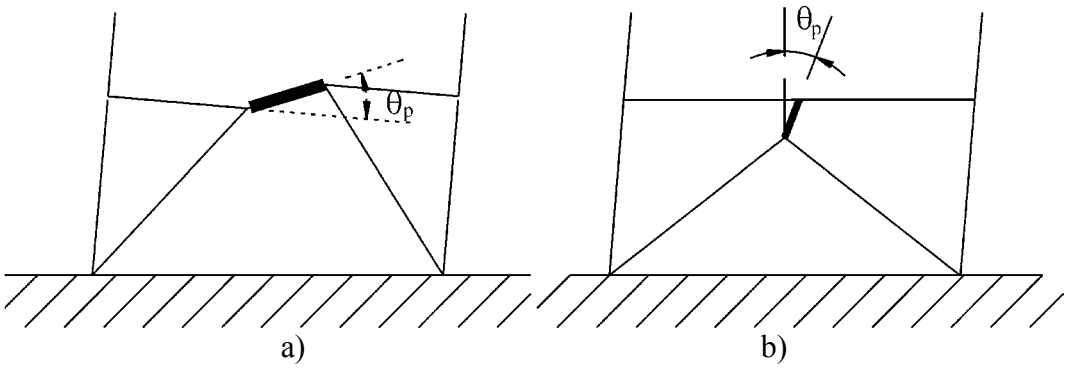

Figure 6.14: a) equal moments at link ends; b) unequal moments at link ends

(10) The link rotation angle θ_p between the link and the element outside of the link as defined in **6.6.4(3)** should be consistent with global deformations. It should not exceed the following values:

– short links $\theta_p \leq \theta_{pR} = 0{,}08$ radians (6.27)

– long links $\theta_p \leq \theta_{pR} = 0{,}02$ radians (6.28)

– intermediate links $\theta_p \leq \theta_{pR}$ = the value determined by linear interpolation between the above values. (6.29)

(11) Full-depth web stiffeners should be provided on both sides of the link web at the diagonal brace ends of the link. These stiffeners should have a combined width of not less than $(b_f - 2t_w)$ and a thickness not less than $0{,}75t_w$ nor 10 mm, whichever is larger.

(12) Links should be provided with intermediate web stiffeners as follows:

a) short links should be provided with intermediate web stiffeners spaced at intervals not exceeding $(30t_w - d/5)$ for a link rotation angle θ_p of 0,08 radians or $(52t_w - d/5)$ for link rotation angles θ_p of 0,02 radians or less. Linear interpolation should be used for values of θ_p between 0,08 and 0,02 radians;

b) long links should be provided with one intermediate web stiffener placed at a distance of 1,5 times b from each end of the link where a plastic hinge would form;

c) intermediate links should be provided with intermediate web stiffeners meeting the requirements of a) and b) above;

d) intermediate web stiffeners are not required in links of length e greater than 5 M_p/V_p;

e) intermediate web stiffeners should be full depth. For links that are less than 600 mm in depth d, stiffeners are required on only one side of the link web. The thickness of one-sided stiffeners should be not less than t_w or 10 mm, whichever is larger, and the width should be not less than $(b/2) - t_w$. For links that are 600 mm in depth or greater, similar intermediate stiffeners should be provided on both sides of the web.

(13) Fillet welds connecting a link stiffener to the link web should have a design strength adequate to resist a force of $\gamma_{ov} f_y A_{st}$, where A_{st} is the area of the stiffener. The

Sofort-Download-Beuth-Book Supply Bureau-KdNr.7066075-ID.SCBLGSA1OBPULJD3QN0TD2AJ.1-2016-08-02 13:22:06

SUPPLIED BY BSB EDGE UNDER LICENCE FROM DIN FOR RAJARAMBAPU INSTITUTE OF TECHNOLOGY - SANGLI DIST. VIDE BSB EDGE ORDER REGISTRATION NO. ORD01-1088 ON 02/08/2016

design strength of fillet welds fastening the stiffener to the flanges should be adequate to resist a force of $\gamma_{ov} A_{st} f_y/4$.

(14) Lateral supports should be provided at both the top and bottom link flanges at the ends of the link. End lateral supports of links should have a design axial resistance sufficient to provide lateral support for forces of 6% of the expected nominal axial strength of the link flange computed as $f_y\, b\, t_f$.

(15) In beams where a seismic link is present, the shear buckling resistance of the web panels outside of the link should be checked to conform to ▌AC⟩ EN 1993-1-5:2006 ⟨AC▐, Section **5**.

6.8.3 Members not containing seismic links

(1) The members not containing seismic links, like the columns and diagonal members, if horizontal links in beams are used, and also the beam members, if vertical links are used, should be verified in compression considering the most unfavourable combination of the axial force and bending moments:

$$N_{Rd}(M_{Ed}, V_{Ed}) \geq N_{Ed,G} + 1{,}1\gamma_{ov}\, \Omega N_{Ed,E} \tag{6.30}$$

where

N_{Rd} (M_{Ed},V_{Ed}) is the axial design resistance of the column or diagonal member in accordance with EN 1993, taking into account the interaction with the bending moment M_{Ed} and the shear V_{Ed} taken at their design value in the seismic situation;

$N_{Ed,G}$ is the compression force in the column or diagonal member due to the non-seismic actions included in the combination of actions for the seismic design situation;

$N_{Ed,E}$ is the compression force in the column or diagonal member due to the design seismic action;

γ_{ov} is the overstrength factor (see **6.1.3(2)** and **6.2(3)**)

Ω is a multiplicative factor which is the minimum of the following values:

the minimum value of $\Omega_i = 1{,}5\ V_{p,link,i}/V_{Ed,i}$ among all short links;

the minimum value of $\Omega_i = 1{,}5\ M_{p,link,i}/M_{Ed,i}$ among all intermediate and long links;

where

$V_{Ed,i}$, $M_{Ed,i}$ are the design values of the shear force and of the bending moment in link i in the seismic design situation;

$V_{p,link,i}$, $M_{p,link,i}$ are the shear and bending plastic design resistances of link i as in **6.8.2(3)**.

Sofort-Download-Beuth-Book Supply Bureau-KdNr.7066075-ID.SCBLGSA1OBPULJD3QN0TD2AJ.1-2016-08-02 13:22:06

SUPPLIED BY BSB EDGE UNDER LICENCE FROM DIN FOR RAJARAMBAPU INSTITUTE OF TECHNOLOGY - SANGLI DIST. VIDE BSB EDGE ORDER REGISTRATION NO. ORD01-1088 ON 02/08/2016

6.8.4 Connections of the seismic links

(1) If the structure is designed to dissipate energy in the seismic links, the connections of the links or of the element containing the links should be designed for action effects E_d computed as follows:

$$E_d \geq E_{d,G} + 1{,}1\gamma_{ov}\,\Omega_l E_{d,E} \tag{6.31}$$

where

$E_{d,G}$ is the action effect in the connection due to the non-seismic actions included in the combination of actions for the seismic design situation;

$E_{d,E}$ is the action effect in the connection due to the design seismic action;

γ_{ov} is the overstrength factor (see **6.1.3(2)** and **6.2(3)**)

Ω_l is the overstrength factor computed in accordance with **6.8.3(1)** for the link.

(2) In the case of semi-rigid and/or partial strength connections, the energy dissipation may be assumed to originate from the connections only. This is allowable, provided that all of the following conditions are satisfied:

a) the connections have rotation capacity sufficient for the corresponding deformation demands;

b) members framing into the connections are demonstrated to be stable at the ULS;

c) the effect of connection deformations on global drift is taken into account.

(3) When partial strength connections are used for the seismic links, the capacity design of the other elements in the structure should be derived from the plastic capacity of the links connections.

6.9 Design rules for inverted pendulum structures

(1) In inverted pendulum structures (defined in **6.3.1**(d)), the columns should be verified in compression considering the most unfavourable combination of the axial force and bending moments.

(2) In the checks, N_{Ed}, M_{Ed}, V_{Ed} should be computed as in **6.6.3**.

(3) The non-dimensional slenderness of the columns should be limited to $\bar{\lambda} \leq 1{,}5$.

(4) The interstorey drift sensitivity coefficient θ as defined in **4.4.2.2** should be limited to $\theta \leq 0{,}20$.

Sofort-Download-Beuth-Book Supply Bureau-KdNr.7066075-ID.SCBLGSA1OBPULJD3QN0TD2AJ.1-2016-08-02 13:22:06

SUPPLIED BY BSB EDGE UNDER LICENCE FROM DIN FOR RAJARAMBAPU INSTITUTE OF TECHNOLOGY - SANGLI DIST. VIDE BSB EDGE ORDER REGISTRATION NO. ORD01-1088 ON 02/08/2016

SUPPLIED BY BSB EDGE UNDER LICENCE FROM DIN FOR RAJARAMBAPU INSTITUTE OF TECHNOLOGY - SANGLI DIST. VIDE BSB EDGE ORDER REGISTRATION NO. ORD01-1088 ON 02/08/2016

Sofort-Download-Beuth-Book Supply Bureau-KdNr.7066075-ID.SCBLGSA1OBPULJD3QN0TD2AJ.1-2016-08-02 13:22:06

6.10 Design rules for steel structures with concrete cores or concrete walls and for moment resisting frames combined with concentric bracings or infills

6.10.1 Structures with concrete cores or concrete walls

(1)P The steel elements shall be verified in accordance with this Section and EN 1993, while the concrete elements shall be designed in accordance with Section **5**.

(2)P The elements in which an interaction between steel and concrete exists shall be verified in accordance with Section **7**.

6.10.2 Moment resisting frames combined with concentric bracings

(1) Dual structures with both moment resisting frames and braced frames acting in the same direction should be designed using a single q factor. The horizontal forces should be distributed between the different frames according to their elastic stiffness.

(2) The moment resisting frames and the braced frames should conform to **6.6**, **6.7** and **6.8**.

6.10.3 Moment resisting frames combined with infills

(1)P Moment resisting frames in which reinforced concrete infills are positively connected to the steel structure shall be designed in accordance with Section **7**.

(2)P The moment resisting frames in which the infills are structurally disconnected from the steel frame on the lateral and top sides shall be designed as steel structures.

(3) The moment resisting frames in which the infills are in contact with the steel frame, but are not positively connected to that frame, should satisfy the following rules:

a) the infills should be uniformly distributed in elevation in order not to increase locally the ductility demand on the frame elements. If this is not verified, the building should be considered as non-regular in elevation;

b) the frame-infill interaction should be taken into account. The internal forces in the beams and columns due to the diagonal strut action in the infills should be taken into account. The rules in **5.9** may be used to this end;

c) the steel frames should be verified in accordance with the rules in this clause, while the reinforced concrete or masonry infills should be designed in accordance with EN 1992-1-1:2004 and in accordance with Sections **5** or **9**.

6.11 Control of design and construction

(1)P The control of design and construction shall ensure that the real structure corresponds to the designed structure.

(2) To this end, in addition to the provisions of EN 1993, the following requirements should be met:

a) the drawings made for fabrication and erection should indicate the details of connections, sizes and qualities of bolts and welds as well as the steel grades of the members, noting the maximum permissible yield stress $f_{y,max}$ of the steel to be used by the fabricator in the dissipative zones;

b) the compliance of the materials with **6.2** should be checked;

c) the control of the tightening of the bolts and of the quality of the welds should follow the rules in ▌AC⟩ in EN 1090-2; ⟨AC▐

d) during construction it should be ensured that the yield stress of the actual steel used does ▌AC⟩ not exceed $f_{y,max}$ noted ⟨AC▐ on the drawings for dissipative zones by more than 10%.

▌AC⟩ (3)P ⟨AC▐ Whenever one of the above conditions is not satisfied, corrections or justifications shall be provided in order to meet the requirements of EN 1998-1 and assure the safety of the structure.

Sofort-Download-Beuth-Book Supply Bureau-KdNr.7066075-ID.SCBLGSA1OBPULJD3QN0TD2AJ.1-2016-08-02 13:22:06

SUPPLIED BY BSB EDGE UNDER LICENCE FROM DIN FOR RAJARAMBAPU INSTITUTE OF TECHNOLOGY - SANGLI DIST. VIDE BSB EDGE ORDER REGISTRATION NO. ORD01-1088 ON 02/08/2016

SUPPLIED BY BSB EDGE UNDER LICENCE FROM DIN FOR RAJARAMBAPU INSTITUTE OF TECHNOLOGY - SANGLI DIST. VIDE BSB EDGE ORDER REGISTRATION NO. ORD01-1088 ON 02/08/2016

Sofort-Download-Beuth-Book Supply Bureau-KdNr.7066075-ID.SCBLGSA1OBPULJD3QN0TD2AJ.1-2016-08-02 13:22:06

7 SPECIFIC RULES FOR COMPOSITE STEEL – CONCRETE BUILDINGS

7.1 General

7.1.1 Scope

(1)P For the design of composite steel - concrete buildings, EN 1994-1-1:2004 applies. The following rules are additional to those given in EN 1994-1-1:2004.

(2) Except where modified by the provisions of this Section, the provisions of Sections **5** and **6** apply.

7.1.2 Design concepts

(1)P Earthquake resistant composite buildings shall be designed in accordance with one of the following design concepts (see Table 7.1):

– Concept a) Low-dissipative structural behaviour.

– Concept b) Dissipative structural behaviour with composite dissipative zones;

– Concept c) Dissipative structural behaviour with steel dissipative zones.

Table 7.1: Design concepts, structural ductility classes and upper limit of reference values of the behaviour factors

Design concept	Structural ductility class	Range of the reference values of the behaviour factor q
Concept a) Low-dissipative structural behaviour	DCL (Low)	≤ 1,5 - 2
Concepts b) or c) Dissipative structural behaviour	DCM (Medium)	≤ 4 also limited by the values of Table 7.2
	DCH (High)	only limited by the values of Table 7.2

NOTE 1 The value ascribed to the upper limit of q for low dissipative behaviour, within the range of Table 7.1, for use in a country may be found in its National Annex to this document. The recommended value of the upper limit of q for low-dissipative behaviour is 1,5.

NOTE 2 The National Annex of a particular country may give limitations on the choice of the design concept and of the ductility class which are permissible within that country.

(2)P In concept a), the action effects may be calculated on the basis of an elastic analysis without taking into account non-linear material behaviour but considering the reduction in the moment of inertia due to the cracking of concrete in part of the beam spans, in accordance with the general structural analysis rules defined in **7.4** and to the specific rules defined in **7.7** to **7.11** related to each structural type. When using the design spectrum defined in **3.2.2.5**, the upper limit to the reference value of the behaviour factor q is taken between 1,5 and 2 (see Note 1 to **(1)** of this subclause). In

case of irregularity in elevation the upper limit value of the behaviour factor q should be corrected as indicated in **4.2.3.1(7)** but it need not be taken as being smaller than 1,5.

(3) In concept a) the resistance of the members and of the connections should be evaluated in accordance with EN 1993 and EN 1994 without any additional requirements. For buildings which are not base-isolated (see Section **10**), design to concept a) is recommended only for low seismicity cases (see **3.2.1(4)**).

(4) In concepts b) and c), the capability of parts of the structure (dissipative zones) to resist earthquake actions through inelastic behaviour is taken into account. When using the design response spectrum defined in **3.2.2.5**, the upper limit to the reference value of the behaviour factor q is taken as being greater than the upper value established in Table 7.1 and in Note 1 to **(1)** of this subclause for low dissipative structural behaviour. The upper limit value of q depends on the ductility class and the structural type (see **7.3**). When adopting concepts b) or c) the requirements given in **7.2** to **7.12** should be fulfilled.

(5)P In concept c), structures are not meant to take advantage of composite behaviour in dissipative zones; the application of concept c) is conditioned by a strict compliance to measures that prevent involvement of the concrete in the resistance of dissipative zones. In concept c) the composite structure is designed in accordance with EN 1994-1-1:2004 under non seismic loads and in accordance with Section **6** to resist earthquake action. The measures preventing involvement of the concrete are given in **7.7.5**.

(6)P The design rules for dissipative composite structures (concept b), aim at the development of reliable local plastic mechanisms (dissipative zones) in the structure and of a reliable global plastic mechanism dissipating as much energy as possible under the design earthquake action. For each structural element or each structural type considered in this Section, rules allowing this general design objective to be achieved are given in **7.5** to **7.11** with reference to what are called the specific criteria. These criteria aim at the development of a global mechanical behaviour for which design provisions can be given.

(7)P Structures designed in accordance with concept b) shall belong to structural ductility classes DCM or DCH. These classes correspond to increased ability of the structure to dissipate energy in plastic mechanisms. A structure belonging to a given ductility class shall meet specific requirements in one or more of the following aspects: class of steel sections, rotational capacity of connections and detailing.

7.1.3 Safety verifications

(1)P **5.2.4(1)**P and **6.1.3(1)**P and its Notes apply.

(2) **5.2.4(2)** applies.

(3) **5.2.4(3)** applies.

(4) In the capacity design checks relevant for structural steel parts, **6.2(3)** and its Notes apply.

Sofort-Download-Beuth-Book Supply Bureau-KdNr.7066075-ID.SCBLGSA1OBPULJD3QN0TD2AJ.1-2016-08-02 13:22:06

SUPPLIED BY BSB EDGE UNDER LICENCE FROM DIN FOR RAJARAMBAPU INSTITUTE OF TECHNOLOGY - SANGLI DIST. VIDE BSB EDGE ORDER REGISTRATION NO. ORD01-1088 ON 02/08/2016

SUPPLIED BY BSB EDGE UNDER LICENCE FROM DIN FOR RAJARAMBAPU INSTITUTE OF TECHNOLOGY - SANGLI DIST. VIDE BSB EDGE ORDER REGISTRATION NO. ORD01-1088 ON 02/08/2016

Sofort-Download-Beuth-Book Supply Bureau-KdNr.7066075-ID.SCBLGSA1OBPULJD3QN0TD2AJ.1-2016-08-02 13:22:06

7.2 Materials

7.2.1 Concrete

(1) In dissipative zones, the prescribed concrete class should not be lower than C20/25. If the concrete class is higher than C40/50, the design is not within the scope of EN 1998-1.

7.2.2 Reinforcing steel

(1)P For ductility class DCM the reinforcing steel taken into account in the plastic resistance of dissipative zones shall be of class B or C in accordance with EN 1992-1-1:2004 Table C.1. For ductility class DCH the reinforcing steel taken into account in the plastic resistance of dissipative zones shalld be of class C according to the same Table.

(2)P Steel of class B or C (EN 1992-1-1:2004, Table C.1) shall be used in highly stressed regions of non dissipative structures. This requirement applies to both bars and welded meshes.

(3)P Except for closed stirrups or cross ties, only ribbed bars are allowed as reinforcing steel in regions with high stresses.

(4) Welded meshes not conforming to the ductility requirements of **(1)**P of this subclause should not be used in dissipative zones. If such meshes are used, ductile reinforcement duplicating the mesh should be placed and their resistance capacity accounted for in the capacity analysis.

7.2.3 Structural steel

(1)P The requirements are those specified in **6.2**.

7.3 Structural types and behaviour factors

7.3.1 Structural types

(1)P Composite steel-concrete structures shall be assigned to one of the following structural types according to the behaviour of their primary resisting structure under seismic actions:

a) Composite moment resisting frames are those with the same definition and limitations as in **6.3.1(1)**a, but in which beams and columns may be either structural steel or composite steel-concrete (see Figure 6.1);

b) Composite concentrically braced frames are those with the same definition and limitations as in **6.3.1(1)**b and Figures 6.2 and 6.3. Columns and beams may be either structural steel or composite steel-concrete. Braces shall be structural steel;

c) Composite eccentrically braced frames are those with the same definition and configurations as in **6.3.1(1)**c and Figure 6.4. The members which do not contain the links may be either structural steel or composite steel-concrete. Other than for the slab, the links shall be structural steel. Energy dissipation shall occur only through yielding in bending or shear of these links;

d) Inverted pendulum structures, have the same definition and limitations as in **6.3.1(1)**d (see Figure 6.5);

e) Composite structural systems are those which behave essentially as reinforced concrete walls. The composite systems may belong to one of the following types:

- Type 1 corresponds to a steel or composite frame working together with concrete infill panels connected to the steel structure (see Figure 7.1a);
- Type 2 is a reinforced concrete wall in which encased steel sections connected to the concrete structure are used as vertical edge reinforcement (see Figure 7.1b);
- Type 3, steel or composite beams are used to couple two or more reinforced concrete or composite walls (see Figure 7.2);

f) Composite steel plate shear walls are those consisting of a vertical steel plate continuous over the height of the building with reinforced concrete encasement on one or both faces of the plate and of the structural steel or composite boundary members.

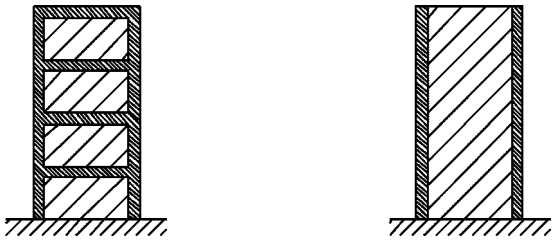

a) b)

Figure 7.1: Composite structural systems. Composite walls: a) Type 1 – steel or composite moment frame with connected concrete infill panels; b) Type 2 – composite walls reinforced by connected encased vertical steel sections.

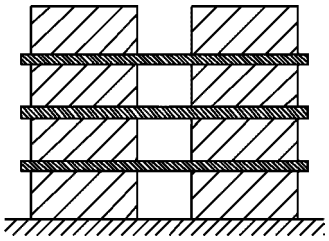

Figure 7.2: Composite structural systems. Type 3 - composite or concrete walls coupled by steel or composite beams.

(2) In all types of composite structural systems the energy dissipation takes place in the vertical steel sections and in the vertical reinforcements of the walls. In type 3 composite structural systems, energy dissipation may also take place in the coupling beams;

(3) If, in composite structural systems the wall elements are not connected to the steel structure, Sections **5** and **6** apply.

Sofort-Download-Beuth-Book Supply Bureau-KdNr.7066075-ID.SCBLGSA1OBPULJD3QN0TD2AJ.1-2016-08-02 13:22:06

SUPPLIED BY BSB EDGE UNDER LICENCE FROM DIN FOR RAJARAMBAPU INSTITUTE OF TECHNOLOGY - SANGLI DIST. VIDE BSB EDGE ORDER REGISTRATION NO. ORD01-1088 ON 02/08/2016

SUPPLIED BY BSB EDGE UNDER LICENCE FROM DIN FOR RAJARAMBAPU INSTITUTE OF TECHNOLOGY - SANGLI DIST. VIDE BSB EDGE ORDER REGISTRATION NO. ORD01-1088 ON 02/08/2016

Sofort-Download-Beuth-Book Supply Bureau-KdNr.7066075-ID.SCBLGSA1OBPULJD3QN0TD2AJ.1-2016-08-02 13:22:06

7.3.2 Behaviour factors

(1) The behaviour factor q, introduced in **3.2.2.5**, accounts for the energy dissipation capacity of the structure. For regular structural systems, the behaviour factor q should be taken with upper limits to the reference value which are given in Table 6.2 or in Table 7.2, provided that the rules in **7.5** to **7.11** are met.

Table 7.2: Upper limits to reference values of behaviour factors for systems regular in elevation

STRUCTURAL TYPE	Ductility Class	
	DCM	DCH
a), b), c) and d)	See Table 6.2	
e) Composite structural systems Composite walls (Type 1 and Type 2)	$3\alpha_u/\alpha_1$	$4\alpha_u/\alpha_1$
Composite or concrete walls coupled by steel or composite beams (Type 3)	$3\alpha_u/\alpha_1$	$4{,}5\alpha_u/\alpha_1$
f) Composite steel plate shear walls	$3\alpha_u/\alpha_1$	$4\alpha_u/\alpha_1$

(2) If the building is non-regular in elevation (see **4.2.3.3**) the values of q listed in Table 6.2 and Table 7.2 should be reduced by 20 % (see **4.2.3.1(7)** and Table 4.1).

(3) For buildings that are regular in plan, if calculations to evaluate α_u/α_1 (see **6.3.2(3)**), are not performed, the approximate default values of the ratio α_u/α_1 presented in Figures 6.1 to 6.8 may be used. For composite structural systems the default value may be taken as being α_u/α_1 = 1,1. For composite steel plate shear walls the default value may be taken as being α_u/α_1 = 1,2.

(4) For buildings which are not regular in plan (see **4.2.3.2**), the approximate value of α_u/α_1 that may be used when calculations are not performed for its evaluation are equal to the average of (a) 1,0 and of (b) the value given in **(3)** of this subclause.

(5) Values of α_u/α_1 higher than those given in **(3)** and **(4)** of this subclause are allowed, provided that they are confirmed by calculating α_u/α_1 with a nonlinear static (pushover) global analysis.

(6) The maximum value of α_u/α_1 that may be used in the design is equal to 1,6, even if the analysis mentioned in **(5)** of this subclause indicates higher potential values.

7.4 Structural analysis

7.4.1 Scope

(1) The following rules apply to the analysis of the structure under earthquake action with the lateral force analysis method and with the modal response spectrum analysis method.

SUPPLIED BY BSB EDGE UNDER LICENCE FROM DIN FOR RAJARAMBAPU INSTITUTE OF TECHNOLOGY - SANGLI DIST. VIDE BSB EDGE ORDER REGISTRATION NO. ORD01-1088 ON 02/08/2016

Sofort-Download-Beuth-Book Supply Bureau-KdNr.7066075-ID.SCBLGSA1OBPULJD3QN0TD2AJ.1-2016-08-02 13:22:06

7.4.2 Stiffness of sections

(1) The stiffness of composite sections in which the concrete is in compression should be computed using a modular ratio n

$$n = E_a / E_{cm} = 7 \tag{7.1}$$

(2) For composite beams with slab in compression, the second moment of area of the section, referred to as I_1, should be computed taking into account the effective width of slab defined in **7.6.3**.

(3) The stiffness of composite sections in which the concrete is in tension should be computed assuming that the concrete is cracked and that only the steel parts of the section are active.

(4) For composite beams with slab in tension, the second moment of area of the section, referred to as I_2, should be computed taking into account the effective width of slab defined in **7.6.3**.

(5) The structure should be analysed taking into account the presence of concrete in compression in some zones and concrete in tension in other zones; the distribution of the zones is given in **7.7** to **7.11** for the various structural types.

7.5 Design criteria and detailing rules for dissipative structural behaviour common to all structural types

7.5.1 General

(1) The design criteria given in **7.5.2** should be applied to the earthquake-resistant parts of structures designed in accordance with the concept of dissipative structural behaviour.

(2) The design criteria given in **7.5.2** are deemed to be satisfied, if the rules given in **7.5.3** and **7.5.4** and in **7.6** to **7.11** are observed.

7.5.2 Design criteria for dissipative structures

(1)P Structures with dissipative zones shall be designed such that yielding or local buckling or other phenomena due to hysteretic behaviour in those zones do not affect the overall stability of the structure.

NOTE The q factors given in Table 7.2 are deemed to conform to this requirement (see **2.2.2(2)**).

(2)P Dissipative zones shall have adequate ductility and resistance. The resistance shall be determined in accordance with EN 1993 and Section **6** for concept c) (see **7.1.2**) and to EN 1994-1-1:2004 and Section **7** for concept b) (see **7.1.2**). Ductility is achieved by compliance to detailing rules.

(3) Dissipative zones may be located in the structural members or in the connections.

(4)P If dissipative zones are located in the structural members, the non-dissipative parts and the connections of the dissipative parts to the rest of the structure shall have sufficient overstrength to allow the development of cyclic yielding in the dissipative parts.

(5)P When dissipative zones are located in the connections, the connected members shall have sufficient overstrength to allow the development of cyclic yielding in the connections.

7.5.3 Plastic resistance of dissipative zones

(1)P Two plastic resistances of dissipative zones are used in the design of composite steel - concrete structures: a lower bound plastic resistance (index: *pl*, *Rd*) and an upper bound plastic resistance (index: *U*, *Rd*).

(2)P The lower bound plastic resistance of dissipative zones is the one taken into account in design checks concerning sections of dissipative elements; e.g. $M_{Ed} < M_{pl,Rd}$. The lower bound plastic resistance of dissipative zones is computed taking into account the concrete component of the section and only the steel components of the section which are classified as ductile.

(3)P The upper bound plastic resistance of dissipative zones is the one used in the capacity design of elements adjacent to the dissipative zone: for instance in the capacity design verification of **4.4.2.3(4)**, the design values of the moments of resistance of beams are the upper bound plastic resistances, $M_{U,Rd,b}$, whereas those of the columns are the lower bound ones, $M_{pl,Rd,c}$.

(4)P The upper bound plastic resistance is computed taking into account the concrete component of the section and all the steel components present in the section, including those that are not classified as ductile.

(5)P Action effects, which are directly related to the resistance of dissipative zones, shall be determined on the basis of the upper bound resistance of composite dissipative sections; e.g. the design shear force at the end of a dissipative composite beam shall be determined on the basis of the upper bound plastic moment of the composite section.

7.5.4 Detailing rules for composite connections in dissipative zones

(1)P The design shall limit localization of plastic strains and high residual stresses and prevent fabrication defects.

(2)P The integrity of the concrete in compression shall be maintained during the seismic event and yielding shall be limited to the steel sections.

(3) Yielding of the reinforcing bars in a slab should be allowed only if beams are designed to conform to **7.6.2(8)**.

(4) For the design of welds and bolts, **6.5** applies.

(5) The local design of the reinforcing bars needed in the concrete of the joint region should be justified by models that satisfy equilibrium (e.g. Annex C for slabs).

Sofort-Download-Beuth-Book Supply Bureau-KdNr.7066075-ID.SCBLGSA1OBPULJD3QN0TD2AJ.1-2016-08-02 13:22:06

SUPPLIED BY BSB EDGE UNDER LICENCE FROM DIN FOR RAJARAMBAPU INSTITUTE OF TECHNOLOGY - SANGLI DIST. VIDE BSB EDGE ORDER REGISTRATION NO. ORD01-1088 ON 02/08/2016

(6) **6.5.5(6)**, **6.5.5(7)** and Note 1 to **6.5.5** apply.

(7) In fully encased framed web panels of beam/column connections, the panel zone resistance may be computed as the sum of contributions from the concrete and steel shear panel, if all the following conditions are satisfied:

a) the aspect ratio h_b/h_c of the panel zone is:

$$0{,}6 < h_b/h_c < 1{,}4 \tag{7.2}$$

b) $V_{wp,Ed} < 0{,}8\ V_{wp,Rd}$ (7.3)

where

$V_{wp,Ed}$ is the design shear force in the web panel due to the action effects, taking into account the plastic resistance of the adjacent composite dissipative zones in beams or connections;

$V_{wp,Rd}$ is the shear resistance of the composite steel - concrete web panel in accordance with EN 1994-1-1:2004;

h_b, h_c are as defined in Figure 7.3a).

Sofort-Download-Beuth-Book Supply Bureau-KdNr.7066075-ID.SCBLGSA1OBPULJD3QN0TD2AJ.1-2016-08-02 13:22:06

SUPPLIED BY BSB EDGE UNDER LICENCE FROM DIN FOR RAJARAMBAPU INSTITUTE OF TECHNOLOGY - SANGLI DIST. VIDE BSB EDGE ORDER REGISTRATION NO. ORD01-1088 ON 02/08/2016

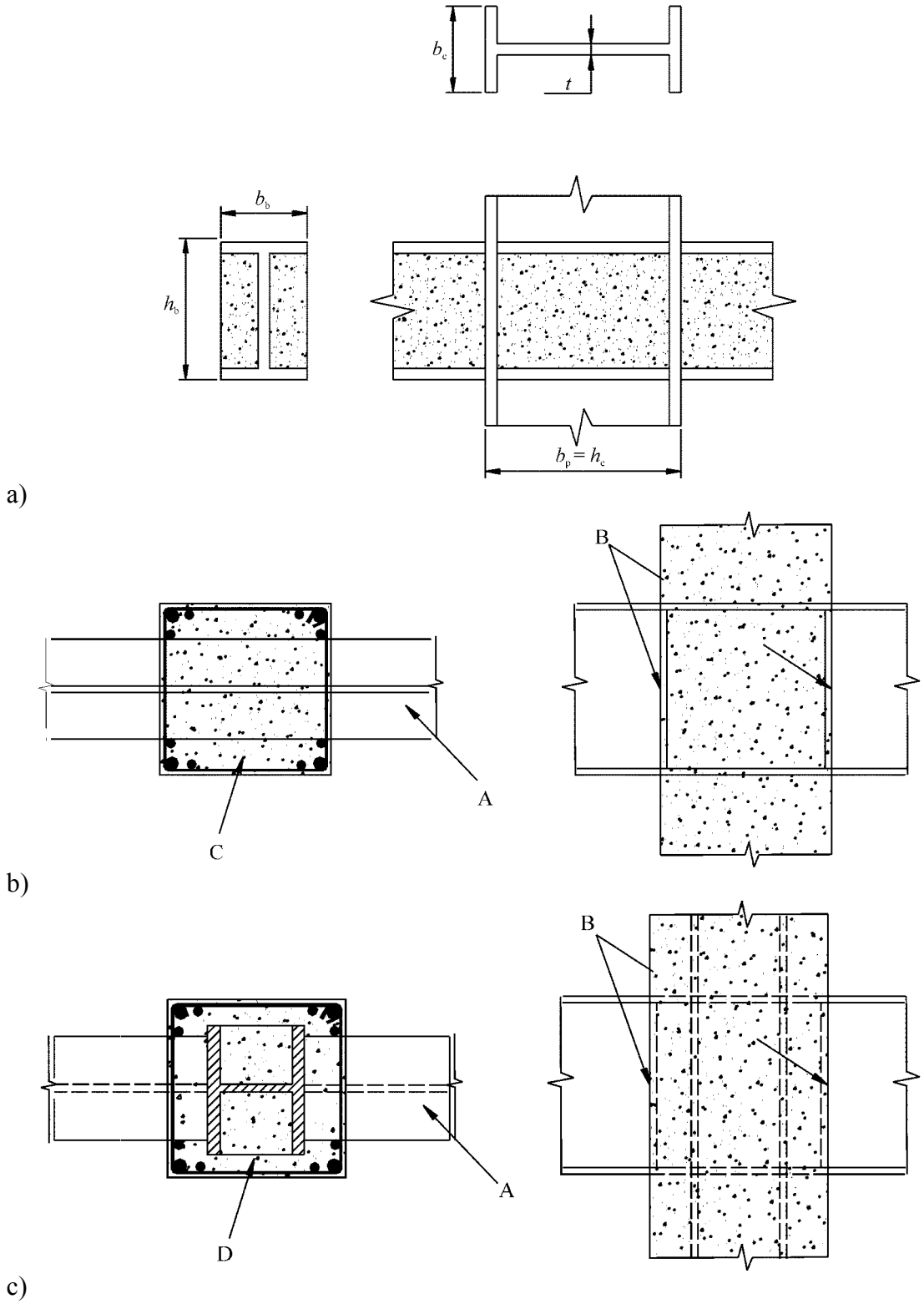

Key

A steel beam;
B face bearing plates;
C reinforced concrete column;
D composite encased column

Figure 7.3: Beam column connections.

Sofort-Download-Beuth-Book Supply Bureau-KdNr.7066075-ID.SCBLGSA1OBPULJD3QN0TD2AJ.1-2016-08-02 13:22:06

SUPPLIED BY BSB EDGE UNDER LICENCE FROM DIN FOR RAJARAMBAPU INSTITUTE OF TECHNOLOGY - SANGLI DIST. VIDE BSB EDGE ORDER REGISTRATION NO. ORD01-1088 ON 02/08/2016

(8) In partially encased stiffened web panels, an assessment similar to that in **(7)** of this subclause is permitted if, in addition to the requirements of **(9)**, one of the following conditions is fulfilled:

a) straight links of the type defined in **7.6.5(4)** and complying with **7.6.5(5)** and **(6)** are provided at a maximum spacing $s_1 = c$ in the partially encased stiffened web panel; these links are oriented perpendicularly to the longest side of the column web panel and no other reinforcement of the web panel is required; or

b) no reinforcement is present, provided that $h_b/b_b < 1{,}2$ and $h_c/b_c < 1{,}2$

where h_b, b_b, b_c and h_c are as defined in Figure 7.3a).

(9) When a dissipative steel or composite beam is framing into a reinforced concrete column as shown in Figure 7.3b), vertical column reinforcement with design axial strength at least equal to the shear strength of the coupling beam should be placed close to the stiffener or face bearing plate adjacent to the dissipative zone. It is permitted to use vertical reinforcement placed for other purposes as part of the required vertical reinforcement. The presence of face bearing plates is required; they should be full depth stiffeners of a combined width not less than ($b_b - 2\,t$); their thickness should be not less than 0,75 t or 8 mm; b_b and t are respectively the beam flange width and the panel web thickness (see Figure 7.3).

(10) When a dissipative steel or composite beam is framing into a fully encased composite column as shown at Figure 7.3c), the beam column connection may be designed either as a beam/steel column connection or a beam/composite column connection. In the latter case, vertical column reinforcements may be calculated either as in **(9)** of this subclause or by distributing the shear strength of the beam between the column steel section and the column reinforcement. In both instances, the presence of face bearing plates as described in **(9)** is required.

(11) The vertical column reinforcement specified in **(9)** and **(10)** of this subclause should be confined by transverse reinforcement that meets the requirements for members defined in **7.6**.

7.6 Rules for members

7.6.1 General

(1)P Composite members, which are primary seismic members, shall conform to EN 1994-1-1:2004 and to additional rules defined in this Section.

(2)P The earthquake resistant structure is designed with reference to a global plastic mechanism involving local dissipative zones; this global mechanism identifies the members in which dissipative zones are located and indirectly the members without dissipative zones.

(3) For tension members or parts of members in tension, the ductility requirement of ▌AC⟩ EN 1993-1-1:2005 ⟨AC▐, **6.2.3(3)** should be met.

Sofort-Download-Beuth-Book Supply Bureau-KdNr.7066075-ID.SCBLGSA1OBPULJD3QN0TD2AJ.1-2016-08-02 13:22:06

SUPPLIED BY BSB EDGE UNDER LICENCE FROM DIN FOR RAJARAMBAPU INSTITUTE OF TECHNOLOGY - SANGLI DIST. VIDE BSB EDGE ORDER REGISTRATION NO. ORD01-1088 ON 02/08/2016

(4) Sufficient local ductility of members which dissipate energy under compression and/or bending should be ensured by restricting the width-to-thickness ratios of their walls. Steel dissipative zones and the not encased steel parts of composite members should meet the requirements of **6.5.3(1)** and Table 6.3. Dissipative zones of encased composite members should meet the requirements of Table 7.3. The limits given for flange outstands of partially or fully encased members may be relaxed if special details are provided as described in **7.6.4(9)** and **7.6.5(4)** to **(6)**.

[AC⟩ Table 7.3: Relation between behaviour factor and slenderness limits of walls of sections in dissipative zones of encased composite structures ⟨AC]

Ductility Class of Structure	DCM		DCH
Reference value of behaviour factor (q)	$q \leq 1{,}5 - 2$	$1{,}5 - 2 < q < 4$	$q > 4$
Partially Encased H or I Section Fully Encased H or I Section flange outstand limits c/t_f:	$20\ \varepsilon$	$14\ \varepsilon$	$9\ \varepsilon$
Filled Rectangular Section h/t limits:	$52\ \varepsilon$	$38\ \varepsilon$	$24\ \varepsilon$
Filled Circular Section d/t limits:	$90\ \varepsilon^2$	$85\ \varepsilon^2$	$80\ \varepsilon^2$

where

$\varepsilon = (f_y/235)^{0,5}$

c/t_f is as defined in Figure 7.8

d/t and h/t are the ratio between the maximum external dimension [AC⟩ and the wall thickness of the steel profile ⟨AC]

(5) More specific detailing rules for dissipative composite members are given in **7.6.2**, **7.6.4**, **7.6.5** and **7.6.6**.

(6) In the design of all types of composite columns, the resistance of the steel section alone or the combined resistances of the steel section and the concrete encasement or infill may be taken into account.

(7) The design of columns in which the member resistance is taken to be provided only by the steel section may be carried out in accordance with the provisions of Section **6**. In the case of dissipative columns, the capacity design rules in **7.5.2(4)** and **(5)** and **7.5.3(3)** should be satisfied.

(8) For fully encased columns with composite behaviour, the minimum cross-sectional dimensions b, h or d should be not less than 250 mm.

(9) The resistance, including shear resistance, of non-dissipative composite columns should be determined in accordance with the rules of EN 1994-1-1:2004.

Sofort-Download-Beuth-Book Supply Bureau-KdNr.7066075-ID.SCBLGSA1OBPULJD3QN0TD2AJ.1-2016-08-02 13:22:06

SUPPLIED BY BSB EDGE UNDER LICENCE FROM DIN FOR RAJARAMBAPU INSTITUTE OF TECHNOLOGY - SANGLI DIST. VIDE BSB EDGE ORDER REGISTRATION NO. ORD01-1088 ON 02/08/2016

(10) In columns, when the concrete encasement or infill are assumed to contribute to the axial and/or flexural resistance of the member, the design rules in **7.6.4** to **7.6.6** apply. These rules ensure full shear transfer between the concrete and the steel parts in a section and protect the dissipative zones against premature inelastic failure.

(11) For earthquake-resistant design, the design shear strength given in EN 1994-1-1:2004, Table 6.6, should be multiplied by a reduction factor of 0,5.

(12) When, for capacity design purposes, the full composite resistance of a column is employed, complete shear transfer between the steel and reinforced concrete parts should be ensured. If insufficient shear transfer is achieved through bond and friction, shear connectors should be provided to ensure full composite action.

(13) Wherever a composite column is subjected to predominately axial forces, sufficient shear transfer should be provided to ensure that the steel and concrete parts share the loads applied to the column at connections to beams and bracing members.

(14) Except at their base in some structural types, columns are generally not designed to be dissipative. However, because of uncertainties in the behaviour, confining reinforcement is required in regions called “critical regions” as specified in **7.6.4**.

(15) Subclauses **5.6.2.1** and **5.6.3** concerning anchorage and splices in the design of reinforced concrete columns apply also to the reinforcements of composite columns.

7.6.2 Steel beams composite with slab

(1)P The design objective of this subclause is to maintain the integrity of the concrete slab during the seismic event, while yielding takes place in the bottom part of the steel section and/or in the rebars of the slab.

(2)P If it is not intended to take advantage of the composite character of the beam section for energy dissipation, **7.7.5** shall be applied.

(3) Beams intended to behave as composite elements in dissipative zones of the earthquake resistant structure may be designed for full or partial shear connection in accordance with EN 1994-1-1:2004. The minimum degree of connection η as defined in EN 1994-1-1:2004 **6.6.1.2** should be not less than 0,8 and the total resistance of the shear connectors within any hogging moment region not less than the plastic resistance of the reinforcement.

(4) The design resistance of connectors in dissipative zones is obtained from the design resistance provided in EN 1994-1-1:2004 multiplied by a reduction factor of 0,75.

(5) Full shear connection is required when non-ductile connectors are used.

(6) When a profiled steel sheeting with ribs transverse to the supporting beams is used, the reduction factor k_t of the design shear resistance of connectors given by EN 1994-1-1 should be further reduced by multiplying it by the rib shape efficiency factor k_r given in Figure 7.4.

Sofort-Download-Beuth-Book Supply Bureau-KdNr.7066075-ID.SCBLGSA1OBPULJD3QN0TD2AJ.1-2016-08-02 13:22:06

SUPPLIED BY BSB EDGE UNDER LICENCE FROM DIN FOR RAJARAMBAPU INSTITUTE OF TECHNOLOGY - SANGLI DIST. VIDE BSB EDGE ORDER REGISTRATION NO. ORD01-1088 ON 02/08/2016

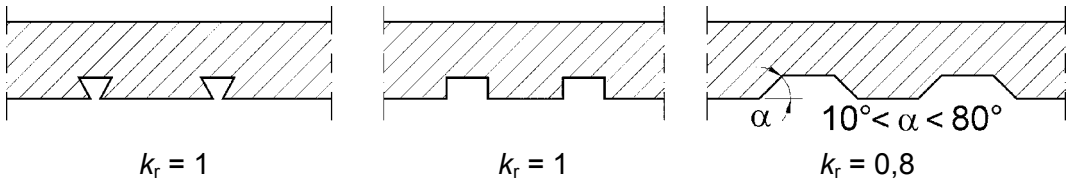

Figure 7.4: Values of the rib shape efficiency factor.

(7) To achieve ductility in plastic hinges, the ratio x/d of the distance x between the top concrete compression fibre and the plastic neutral axis, to the depth d of the composite section, should conform to the following expression:

$$x/d < \varepsilon_{cu2} / (\varepsilon_{cu2} + \varepsilon_a) \quad (7.4)$$

where

ε_{cu2} is the ultimate compressive strain of concrete (see EN 1992-1-1:2004);

ε_a is the total strain in steel at Ultimate Limit State.

(8) The rule in **(7)** of this subclause is deemed to be satisfied when x/d of a section is less than the limits given in Table 7.4.

Table 7.4: Limit values of *x/d* for ductility of beams with slab

Ductility class	q	f_y (N/mm^2)	x/d upper limit
DCM	$1,5 < q \leq 4$	355	0,27
	$1,5 < q \leq 4$	235	0,36
DCH	$q > 4$	355	0,20
	$q > 4$	235	0,27

(9) In dissipative zones of beams, specific ductile steel reinforcement of the slab called “seismic rebars” (see Figure 7.5), should be present in the connection zone of the beam and the column. Its design and the symbols used in Figure 7.5 are specifed in Annex C.

Sofort-Download-Beuth-Book Supply Bureau-KdNr.7066075-ID.SCBLGSA1OBPULJD3QN0TD2AJ.1-2016-08-02 13:22:06

SUPPLIED BY BSB EDGE UNDER LICENCE FROM DIN FOR RAJARAMBAPU INSTITUTE OF TECHNOLOGY - SANGLI DIST. VIDE BSB EDGE ORDER REGISTRATION NO. ORD01-1088 ON 02/08/2016

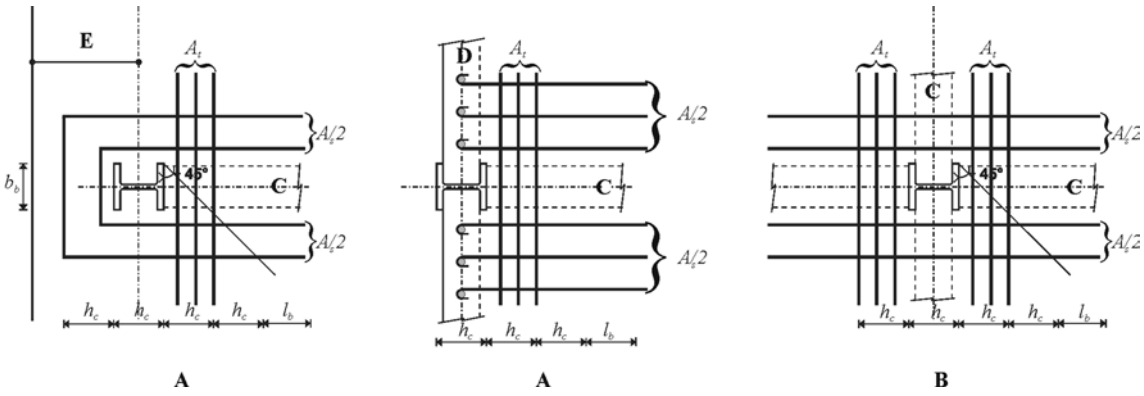

Key

A Exterior Node

B Interior Node

C Steel beam

D Façade steel beam

E Reinforced concrete cantilever edge strip

Figure 7.5: Layout of "seismic rebars"

7.6.3 Effective width of slab

(1) The total effective width b_{eff} of concrete flange associated with each steel web should be taken as the sum of the partial effective widths b_{e1} and b_{e2} of the portion of the flange on each side of the centreline of the steel web (Figure 7.6). The partial effective width on each side should be taken as b_e given in Table 7.5, but not greater than the actual available widths b_1 and b_2 defined in **(2)** of this subclause.

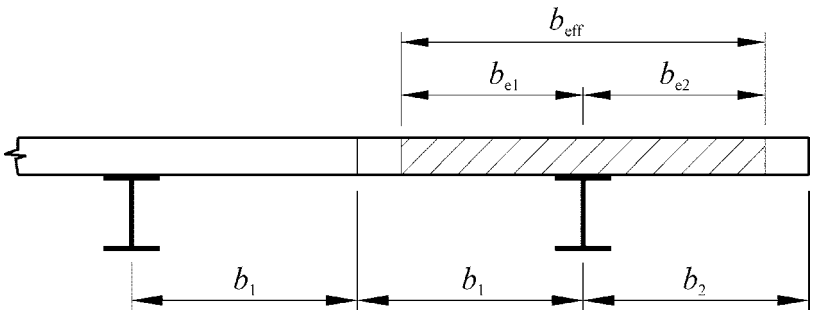

Figure 7.6: Definition of effective width b_e and b_{eff}

(2) The actual width b of each portion should be taken as half the distance from the web to the adjacent web, except that at a free edge the actual width is the distance from the web to the free edge.

(3) The partial effective width b_e of the slab to be used in the determination of the elastic and plastic properties of the composite T sections made of a steel section connected to a slab are defined in Table 7.5 and Figure 7.7. These values are valid for beams positioned as beams C in Figure 7.5 and if the design of the slab reinforcement and of the connection of the slab to the steel beams and columns are in accordance with

Sofort-Download-Beuth-Book Supply Bureau-KdNr.7066075-ID.SCBLGSA1OBPULJD3QN0TD2AJ.1-2016-08-02 13:22:06

SUPPLIED BY BSB EDGE UNDER LICENCE FROM DIN FOR RAJARAMBAPU INSTITUTE OF TECHNOLOGY - SANGLI DIST. VIDE BSB EDGE ORDER REGISTRATION NO. ORD01-1088 ON 02/08/2016

Annex C. In Table 7.5 those moments which induce compression in the slab are considered as positive and those which induce tension in the slab are considered as negative. Symbols b_b , h_c , b_e , b_{eff} and l used in Tables 7.5 I and 7.5 II are defined in Figures 7.5, 7.6 and 7.7. b_b is the bearing width of the concrete of the slab on the column in the horizontal direction perpendicular to the beam for which the effective width is computed; this bearing width possibly includes additional plates or devices aiming at increased bearing capacity.

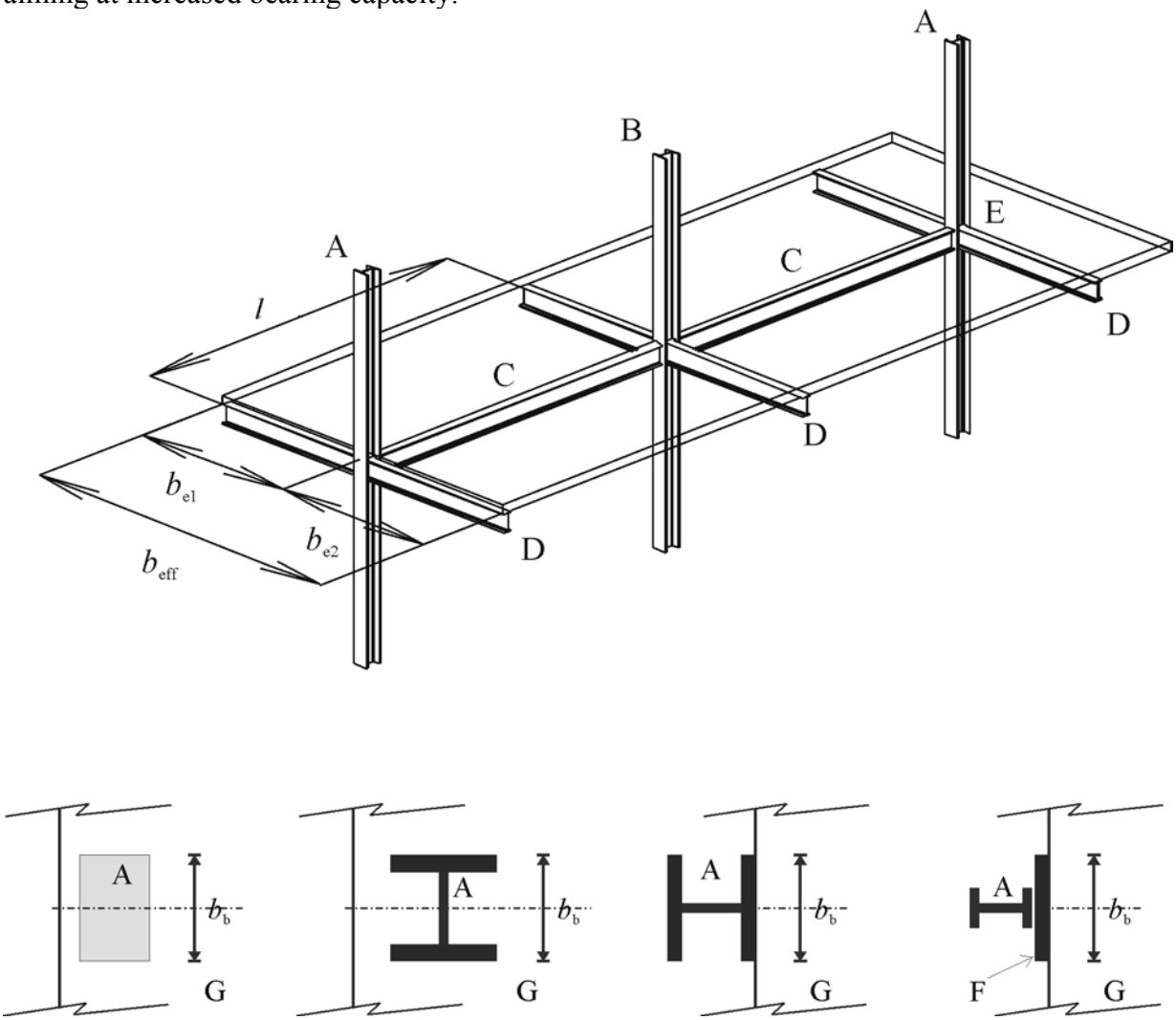

Key

A Exterior column;

B Interior column;

C Longitudinal beam;

D Transverse beam or steel façade beam;

E Cantilever concrete edge strip;

F Extended bearing;

G Concrete slab

Figure 7.7: Definition of elements in moment frame structures.

Sofort-Download-Beuth-Book Supply Bureau-KdNr.7066075-ID.SCBLGSA1OBPULJD3QN0TD2AJ.1-2016-08-02 13:22:06

SUPPLIED BY BSB EDGE UNDER LICENCE FROM DIN FOR RAJARAMBAPU INSTITUTE OF TECHNOLOGY - SANGLI DIST. VIDE BSB EDGE ORDER REGISTRATION NO. ORD01-1088 ON 02/08/2016

Table 7.5 I: Partial effective width b_e of slab for elastic analysis of the structure

b_e	Transverse element	b_e for I (ELASTIC)
At interior column	Present or not present	For negative M : 0,05 l
At exterior column	Present	For positive M : 0,0375 l
At exterior column	Not present, or re-bars not anchored	For negative M : 0 For positive M : 0,025 l

Table 7.5 II: Partial effective width b_e of slab for evaluation of plastic moment resistance

Sign of bending moment M	Location	Transverse element	b_e for M_{Rd} (PLASTIC)
Negative M	Interior column	Seismic re-bars	0,1 l
Negative M	Exterior column	All layouts with re-bars anchored to façade beam or to concrete cantilever edge strip	0,1 l
Negative M	Exterior column	All layouts with re-bars not anchored to façade beam or to concrete cantilever edge strip	0,0
Positive M	Interior column	Seismic re-bars	0,075 l
Positive M	Exterior column	Steel transverse beam with connectors. Concrete slab up to exterior face of column of H section with strong axis oriented as in Fig. 7.5 or beyond (concrete edge strip). Seismic re-bars	0,075 l
Positive M	Exterior column	No steel transverse beam or steel transverse beam without connectors. Concrete slab up to exterior face of column of H section with strong axis oriented as in Fig. 7.5, or beyond (edge strip). Seismic re-bars	$b_b/2 + 0{,}7\ h_c/2$
Positive M	Exterior column	All other layouts. Seismic re-bars	$b_b/2 \leq b_{e,max}$ $b_{e,max} = 0{,}05l$

7.6.4 Fully encased composite columns

(1) In dissipative structures, critical regions are present at both ends of all column clear lengths in moment frames and in the portion of columns adjacent to links in eccentrically braced frames. The lengths l_{cr} of these critical regions (in metres) are specified by expression (5.14) for ductility class M, or by expression (5.30) for ductility class H, with h_c in these expressions denoting the depth of the composite section (in metres).

(2) To satisfy plastic rotation demands and to compensate for loss of resistance due to spalling of cover concrete, the following expression should be satisfied within the critical regions defined above:

Sofort-Download-Beuth-Book Supply Bureau-KdNr.7066075-ID.SCBLGSA1OBPULJD3QN0TD2AJ.1-2016-08-02 13:22:06

SUPPLIED BY BSB EDGE UNDER LICENCE FROM DIN FOR RAJARAMBAPU INSTITUTE OF TECHNOLOGY - SANGLI DIST. VIDE BSB EDGE ORDER REGISTRATION NO. ORD01-1088 ON 02/08/2016

$$\alpha\,\omega_{wd} \geq 30 \cdot \mu_\phi \cdot \nu_d \cdot \varepsilon_{sy,d} \cdot \frac{b_c}{b_o} - 0{,}035 \tag{7.5}$$

in which the variables are as defined in **5.4.3.2.2(8)** and the normalised design axial force ν_d is defined as:

$$\nu_d = N_{Ed}/N_{pl,Rd} = N_{Ed}/(A_a f_{yd} + A_c f_{cd} + A_s f_{sd}) \tag{7.6}$$

[AC] where

A_a is the area of the steel section

A_c is the area of concrete

A_s is the area of rebars

f_{yd} is the design value of the yield strength of steel

f_{cd} is the design value of the concrete compressive strength

f_{sd} is the design value of the yield strength of the rebar steel [AC]

(3) The spacing, *s,* (in millimetres) of confining hoops in critical regions should not exceed

$$s = \min(b_o/2,\ 260,\ 9\,d_{bL}) \text{ in ductility class DCM;} \tag{7.7}$$

$$s = \min(b_o/2,\ 175,\ 8\,d_{bL}) \text{ in ductility class DCH} \tag{7.8}$$

or at the lower part of the lower storey, in ductility class DCH

$$s = \min(b_o/2,\ 150,\ 6d_{bL}) \tag{7.9}$$

where

b_o is the minimum dimension of the concrete core (to the centreline of the hoops, in millimetres);

d_{bL} is the minimum diameter of the longitudinal rebars (in millimetres).

(4) The diameter of the hoops, d_{bw}, (in millimetres) should be at least

$$d_{bw} = 6 \text{ in ductility class DCM} \tag{7.10}$$

$$d_{bw} = \max(\,0{,}35\ d_{bL,max}[f_{ydL}/f_{ydw}]^{0,5},\ 6) \text{ in ductility class DCH} \tag{7.11}$$

where

$d_{bL,max}$ is the maximum diameter of the longitudinal rebars (in millimetres).

(5) In critical regions, the distance between consecutive longitudinal bars restrained by hoop bends or cross-ties should not exceed 250 mm in ductility class DCM or 200 mm in ductility class DCH.

(6) In the lower two storeys of a building, hoops in accordance with **(3)**, **(4)** and **(5)** should be provided beyond the critical regions for an additional length equal to half the length of the critical regions.

Sofort-Download-Beuth-Book Supply Bureau-KdNr.7066075-ID.SCBLGSA1OBPULJD3QN0TD2AJ.1-2016-08-02 13:22:06

SUPPLIED BY BSB EDGE UNDER LICENCE FROM DIN FOR RAJARAMBAPU INSTITUTE OF TECHNOLOGY - SANGLI DIST. VIDE BSB EDGE ORDER REGISTRATION NO. ORD01-1088 ON 02/08/2016

(7) In dissipative composite columns, the shear resistance should be determined on the basis of the structural steel section alone.

(8) The relationship between the ductility class of the structure and the allowable slenderness (c/t_f) of the flange outstand in dissipative zones is given in Table 7.3.

(9) Confining hoops can delay local buckling in the dissipative zones. The limits given in Table 7.3 for flange slenderness may be increased if the hoops are provided at a longitudinal spacing, s, which is less than the flange outstand: $s/c < 1{,}0$. For $s/c < 0{,}5$ the limits given in Table 7.3 may be increased by up to 50%. For values of $0{,}5 < s/c < 1{,}0$ linear interpolation may be used.

(10) The diameter d_{bw} of confining hoops used to prevent flange buckling should be not less than

$$d_{bw} = \left[(b \cdot t_f / 8)(f_{ydf} / f_{ydw})\right]^{0,5} \tag{7.12}$$

in which b and t_f are the width and thickness of the flange respectively and f_{ydf} and f_{ydw} are the design yield strengths of the flange and reinforcement respectively.

7.6.5 Partially-encased members

(1) In dissipative zones where energy is dissipated by plastic bending of a composite section, the longitudinal spacing of the transverse reinforcement, s, should satisfy the requirements of **7.6.4(3)** over a length greater or equal to l_{cr} for dissipative zones at the end of a member and $2l_{cr}$ for dissipative zones in the member.

(2) In dissipative members, the shear resistance should be determined on the basis of the structural steel section alone, unless special details are provided to mobilise the shear resistance of the concrete encasement.

(3) The relationship between the ductility class of the structure and the allowable slenderness (c/t) of the flange outstand in dissipative zones is given in Table 7.3.

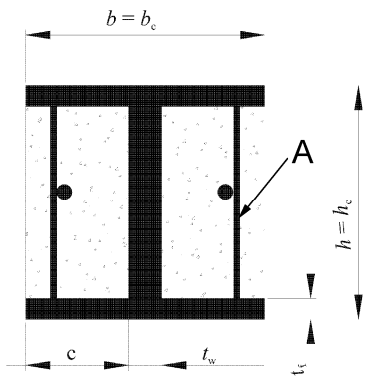

Key

A Additional straight bars (links)

Figure 7.8: Detail of transverse reinforcement, with the additional straight bars (links) welded to the flanges.

(4) Straight links welded to the inside of the flanges, as shown in Figure 7.8, additional to the reinforcements required by EN 1994-1-1, can delay local buckling in

Sofort-Download-Beuth-Book Supply Bureau-KdNr.7066075-ID.SCBLGSA1OBPULJD3QN0TD2AJ.1-2016-08-02 13:22:06

SUPPLIED BY BSB EDGE UNDER LICENCE FROM DIN FOR RAJARAMBAPU INSTITUTE OF TECHNOLOGY - SANGLI DIST. VIDE BSB EDGE ORDER REGISTRATION NO. ORD01-1088 ON 02/08/2016

the dissipative zones. In this case, the limits given in Table 7.3 for flange slenderness may be increased if these bars are provided at a longitudinal spacing, s_1. which is less than the flange outstand: $s_1/c < 1{,}0$. For $s_1/c < 0{,}5$ the limits given in Table 7.3 may be increased by up to 50%. For values of $0{,}5 < s_1/c < 1{,}0$ linear interpolation may be used.

The additional straight links should also conform to the rules in **(5)** and **(6)** of this subclause.

(5) The diameter, $d_{bw,}$ of the additional straight links referred to in **(4)** of this subclause should be at least 6 mm. When transverse links are employed to delay local flange buckling as described in **(4)**, d_{bw} should be not less than the value given by expression (7.12).

(6) The additional straight links referred to in **(4)** should be welded to the flanges at both ends and the capacity of the welds should be not less than the tensile yield strength of the straight links. A clear concrete cover of at least 20 mm, but not exceeding 40 mm, should be provided to these links.

(7) The design of partially-encased composite members may take into account the resistance of the steel section alone, or the composite resistance of the steel section and of concrete encasement.

(8) The design of partially-encased members in which only the steel section is assumed to contribute to member resistance may be carried out in accordance with the provisions of Section **6**, but the capacity design provisions of **7.5.2(4)** and **(5)** and **7.5.3(3)** should be applied.

7.6.6 Filled Composite Columns

(1) The relationship between the ductility class of the structure and the allowable slenderness d/t or h/t is given in Table 7.3.

(2) The shear resistance of dissipative columns should be determined on the basis of the structural steel section or on the basis of the reinforced concrete section with the steel hollow section taken only as shear reinforcement.

(3) In non-dissipative members, the shear resistance of the column should be determined in accordance with EN 1994-1-1.

7.7 Design and detailing rules for moment frames

7.7.1 Specific criteria

(1)P **6.6.1(1)**P applies.

(2)P The composite beams shall be designed for ductility and so that the integrity of the concrete is maintained.

(3) Depending on the location of the dissipative zones, either **7.5.2(4)** or **7.5.2(5)** applies.

(4) The required hinge formation pattern should be achieved by observing the rules given in **4.4.2.3** **7.7.3** **7.7.4** and **7.7.5**

Sofort-Download-Beuth-Book Supply Bureau-KdNr.7066075-ID.SCBLGSA1OBPULJD3QN0TD2AJ.1-2016-08-02 13:22:06

SUPPLIED BY BSB EDGE UNDER LICENCE FROM DIN FOR RAJARAMBAPU INSTITUTE OF TECHNOLOGY - SANGLI DIST. VIDE BSB EDGE ORDER REGISTRATION NO. ORD01-1088 ON 02/08/2016

SUPPLIED BY BSB EDGE UNDER LICENCE FROM DIN FOR RAJARAMBAPU INSTITUTE OF TECHNOLOGY - SANGLI DIST. VIDE BSB EDGE ORDER REGISTRATION NO. ORD01-1088 ON 02/08/2016

Sofort-Download-Beuth-Book Supply Bureau-KdNr.7066075-ID.SCBLGSA1OBPULJD3QN0TD2AJ.1-2016-08-02 13:22:06

7.7.2 Analysis

(1)P The analysis of the structure shall be performed on the basis of the section properties defined in **7.4**.

(2) In beams, two different flexural stiffnesses should be taken into account: EI_1 for the part of the spans submitted to positive (sagging) bending (uncracked section) and EI_2 for the part of the span submitted to negative (hogging) bending (cracked section).

(3) The analysis may alternatively be performed taking into account for the entire beam an equivalent second moment of area I_{eq} constant for the entire span:

$$I_{eq} = 0{,}6\, I_1 + 0{,}4\, I_2 \tag{7.13}$$

(4) For composite columns, the flexural stiffness is given by:

$$(EI)_c = 0{,}9(\, EI_a + r\, E_{cm}\, I_c + E\, I_s\,) \tag{7.14}$$

where

E and E_{cm} are the modulus of elasticity for steel and concrete respectively;

r is the reduction factor depending on the type of column cross-section;

I_a, I_c and I_s denote the second moment of area of the steel section, of the concrete and of the rebars respectively.

NOTE The value ascribed to r for use in a country may be found in its National Annex of this document. The recommended value is $r = 0{,}5$.

7.7.3 Rules for beams and columns

(1)P Composite T beam design shall conform to **7.6.2**. Partially encased beams shall conform to **7.6.5**.

(2)P Beams shall be verified for lateral and lateral torsional buckling in accordance with EN 1994-1-1, assuming the formation of a negative plastic moment at one end of the beam.

(3) **6.6.2(2)** applies.

(4) Composite trusses should not be used as dissipative beams.

(5)P **6.6.3(1)**P applies.

(6) In columns where plastic hinges form as stated in **7.7.1(1)**, the verification should assume that $M_{pl,Rd}$ is realised in these plastic hinges.

(7) The following expression should apply for all composite columns:

$$N_{Ed}/N_{pl,Rd} < 0{,}30 \tag{7.15}$$

(8) The resistance verifications of the columns should be made in accordance with EN 1994-1-1:2004, **4.8**.

(9) The column shear force V_{Ed} (from the analysis) should be limited in accordance with expression (6.4).

7.7.4 Beam to column connections

(1) The provisions given in **6.6.4** apply.

7.7.5 Condition for disregarding the composite character of beams with slab.

(1)P The plastic resistance of a beam section composite with slab (lower or upper bound plastic resistance of dissipative zones) may be computed taking into account only the steel section (design in accordance with concept c) as defined in **7.1.2**) if the slab is totally disconnected from the steel frame in a circular zone around a column of diameter $2b_{eff}$, with b_{eff} being the larger of the effective widths of the beams connected to that column.

(2) For the purposes of **(1)**P, "totally disconnected" means that there is no contact between slab and any vertical side of any steel element (e.g. columns, shear connectors, connecting plates, corrugated flange, steel deck nailed to flange of steel section).

(3) In partially encased beams, the contribution of concrete between the flanges of the steel section should be taken into account.

7.8 Design and detailing rules for composite concentrically braced frames

7.8.1 Specific criteria

(1)P **6.7.1(1)**P applies.

(2)P Columns and beams shall be either structural steel or composite.

(3)P Braces shall be structural steel.

(4) **6.7.1(2)**P applies

7.8.2 Analysis

(1) The provisions given in **6.7.2** apply.

7.8.3 Diagonal members

(1) The provisions given in **6.7.3** apply.

7.8.4 Beams and columns

(1) The provisions given in **6.7.4** apply.

7.9 Design and detailing rules for composite eccentrically braced frames

7.9.1 Specific criteria

(1)P Composite frames with eccentric bracings shall be designed so that the dissipative action will occur essentially through yielding in bending or shear of the

Sofort-Download-Beuth-Book Supply Bureau-KdNr.7066075-ID.SCBLGSA1OBPULJD3QN0TD2AJ.1-2016-08-02 13:22:06

SUPPLIED BY BSB EDGE UNDER LICENCE FROM DIN FOR RAJARAMBAPU INSTITUTE OF TECHNOLOGY - SANGLI DIST. VIDE BSB EDGE ORDER REGISTRATION NO. ORD01-1088 ON 02/08/2016

links. All other members shall remain elastic and failure of connections shall be prevented.

(2)P Columns, beams and braces shall be either structural steel or composite.

(3)P The braces, columns and beam segments outside the link segments shall be designed to remain elastic under the maximum forces that can be generated by the fully yielded and cyclically strain-hardened beam link.

(4)P **6.8.1(2)**P applies.

7.9.2 Analysis

(1)P The analysis of the structure is based on the section properties defined in **7.4.2**.

(2) In beams, two different flexural stiffnesses are taken into account: EI_1 for the part of the spans submitted to positive (sagging) bending (uncracked section) and EI_2 for the part of the span submitted to negative (hogging) bending (cracked section).

7.9.3 Links

(1)P Links shall be made of steel sections, possibly composite with slabs. They may not be encased.

(2) The rules on seismic links and their stiffeners given in **6.8.2** apply. Links should be of short or intermediate length with a maximum length e:

– In structures where two plastic hinges would form at link ends

$$e = 2M_{\text{p, link}} / V_{\text{p, link.}} \tag{7.16}$$

– In structures where one plastic hinge would form at one end of a link

$$e < M_{\text{p, link}} / V_{\text{p, link}} \tag{7.17}$$

The definitions of $M_{\text{p,link}}$ and $V_{\text{p,link}}$ are given in **6.8.2(3)**. For $M_{\text{p,link}}$, only the steel components of the link section, disregarding the concrete slab, are taken into account in the evaluation.

(3) When the seismic link frames into a reinforced concrete column or an encased column, face bearing plates should be provided on both sides of the link at the face of the column and in the end section of the link. These bearing plates should conform to **7.5.4**.

(4) The design of beam/column connections adjacent to dissipative links should conform to **7.5.4**.

(5) Connections should meet the requirements of the connections of eccentrically braced steel frames as in **6.8.4**.

Sofort-Download-Beuth-Book Supply Bureau-KdNr.7066075-ID.SCBLGSA1OBPULJD3QN0TD2AJ.1-2016-08-02 13:22:06

SUPPLIED BY BSB EDGE UNDER LICENCE FROM DIN FOR RAJARAMBAPU INSTITUTE OF TECHNOLOGY - SANGLI DIST. VIDE BSB EDGE ORDER REGISTRATION NO. ORD01-1088 ON 02/08/2016

SUPPLIED BY BSB EDGE UNDER LICENCE FROM DIN FOR RAJARAMBAPU INSTITUTE OF TECHNOLOGY - SANGLI DIST. VIDE BSB EDGE ORDER REGISTRATION NO. ORD01-1088 ON 02/08/2016

7.9.4 Members not containing seismic links

(1) The members not containing seismic links should conform to the rules in **6.8.3**, taking into account the combined resistance of steel and concrete in the case of composite elements and the relevant rules for members in **7.6** and in EN 1994-1-1:2004.

(2) Where a link is adjacent to a fully encased composite column, transverse reinforcement meeting the requirements of **7.6.4** should be provided above and below the link connection.

(3) In case of a composite brace under tension, only the cross-section of the structural steel section should be taken into account in the evaluation of the resistance of the brace.

7.10 Design and detailing rules for structural systems made of reinforced concrete shear walls composite with structural steel elements

7.10.1 Specific criteria

(1)P The provisions in this subclause apply to composite structural systems belonging in one of the three types defined in **7.3.1e**.

(2)P Structural system types 1 and 2 shall be designed to behave as shear walls and dissipate energy in the vertical steel sections and in the vertical reinforcement. The infills shall be tied to the boundary elements to prevent separation.

(3)P In structural system type 1, the storey shear forces shall be carried by horizontal shear in the wall and in the interface between the wall and beams.

(4)P Structural system type 3 shall be designed to dissipate energy in the shear walls and in the coupling beams.

Sofort-Download-Beuth-Book Supply Bureau-KdNr.7066075-ID.SCBLGSA1OBPULJD3QN0TD2AJ.1-2016-08-02 13:22:06

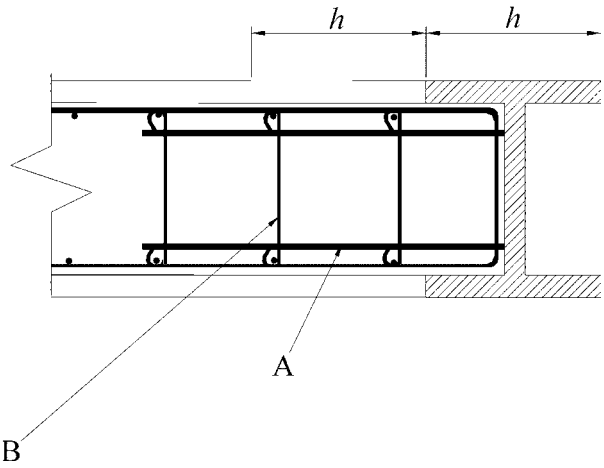

Key

A bars welded to column;

B transverse reinforcement

Figure 7.9a: Details of partially encased composite boundary elements (details of transverse reinforcements are for ductility class DCH).

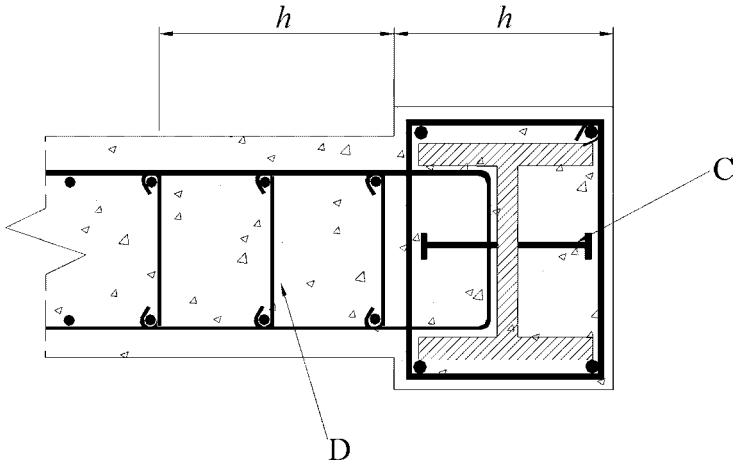

Key

C = shear connectors;

D = cross tie

Figure 7.9b: Details of fully encased composite boundary elements (details of transverse reinforcements are for ductility class DCH).

Sofort-Download-Beuth-Book Supply Bureau-KdNr.7066075-ID.SCBLGSA1OBPULJD3QN0TD2AJ.1-2016-08-02 13:22:06

SUPPLIED BY BSB EDGE UNDER LICENCE FROM DIN FOR RAJARAMBAPU INSTITUTE OF TECHNOLOGY - SANGLI DIST. VIDE BSB EDGE ORDER REGISTRATION NO. ORD01-1088 ON 02/08/2016

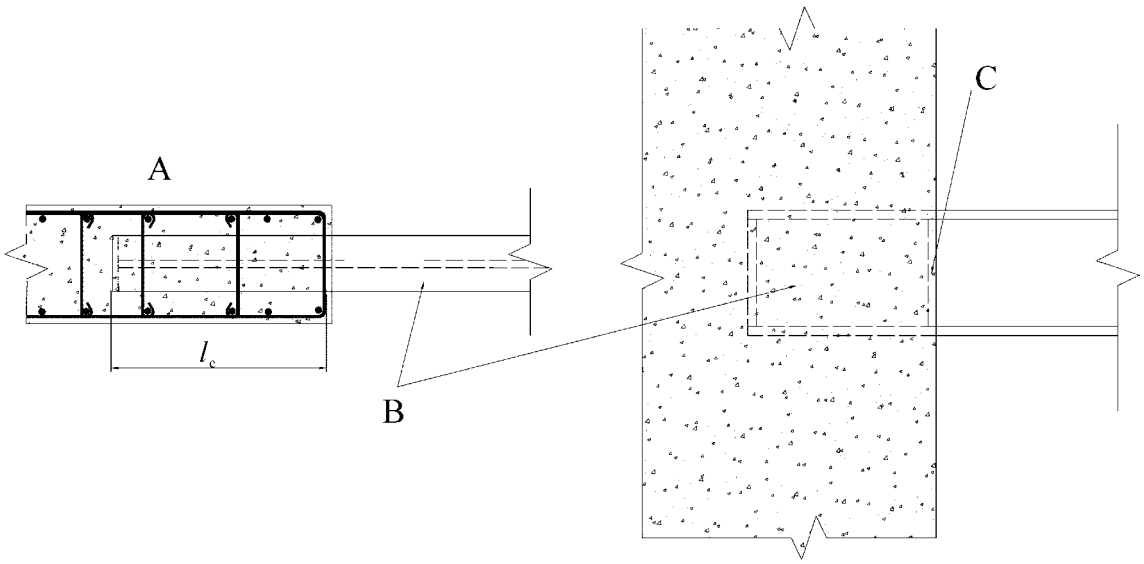

Key
A Additional wall reinforcement at embedment of steel beam;
B Steel coupling beam;
C Face bearing plate

Figure 7.10: Details of coupling beam framing into a wall (details are for ductility class DCH

7.10.2 Analysis

(1)P The analysis of the structure shall be based on the section properties defined in Section **5** for concrete walls and in **7.4.2** for composite beams.

(2)P In structural systems of type 1 or type 2, when vertical fully encased or partially encased structural steel sections act as boundary members of reinforced concrete infill panels, the analysis shall be made assuming that the seismic action effects in these vertical boundary elements are axial forces only.

(3) These axial forces should be determined assuming that the shear forces are carried by the reinforced concrete wall and that the entire gravity and overturning forces are carried by the shear wall acting composedly with the vertical boundary members.

(4) In structural system of type 3, if composite coupling beams are used, **7.7.2(2)** and **(3)** apply.

7.10.3 Detailing rules for composite walls of ductility class DCM

(1)P The reinforced concrete infill panels in Type 1 and the reinforced concrete walls in Types 2 and 3 shall meet the requirements of Section **5** for ductile walls of DCM.

(2)P Partially encased steel sections used as boundary members of reinforced concrete panels shall belong to a class of cross-section related to the behaviour factor of the structure as indicated in Table 7.3.

Sofort-Download-Beuth-Book Supply Bureau-KdNr.7066075-ID.SCBLGSA1OBPULJD3QN0TD2AJ.1-2016-08-02 13:22:06

SUPPLIED BY BSB EDGE UNDER LICENCE FROM DIN FOR RAJARAMBAPU INSTITUTE OF TECHNOLOGY - SANGLI DIST. VIDE BSB EDGE ORDER REGISTRATION NO. ORD01-1088 ON 02/08/2016

(3)P Fully encased structural steel sections used as boundary members in reinforced concrete panels shall be designed in accordance with **7.6.4**.

(4)P Partially encased structural steel sections used as boundary members of reinforced concrete panels shall be designed in accordance with **7.6.5**.

(5) Headed shear studs or tie reinforcement (welded to, anchored through holes in the steel members or anchored around the steel member) should be provided to transfer vertical and horizontal shear forces between the structural steel of the boundary elements and the reinforced concrete.

7.10.4 Detailing rules for coupling beams of ductility class DCM

(1)P Coupling beams shall have an embedment length into the reinforced concrete wall sufficient to resist the most adverse combination of moment and shear generated by the bending and shear strength of the coupling beam. The embedment length l_e shall be taken to begin inside the first layer of the confining reinforcement in the wall boundary member (see Figure 7.10). The embedment length l_e shall be not less than 1,5 times the height of the coupling beam

(2)P The design of beam/wall connections shall conform to **7.5.4**.

(3) The vertical wall reinforcements, defined in **7.5.4(9)** and **(10)** with design axial strength equal to the shear strength of the coupling beam, should be placed over the embedment length of the beam with two-thirds of the steel located over the first half of the embedment length. This wall reinforcement should extend a distance of at least one anchorage length above and below the flanges of the coupling beam. It is permitted to use vertical reinforcement placed for other purposes, such as for vertical boundary members, as part of the required vertical reinforcement. Transverse reinforcement should conform to **7.6**.

7.10.5 Additional detailing rules for ductility class DCH.

(1)P Transverse reinforcement for confinement of the composite boundary members, either partially or fully encased, shall be used. Reinforcement shall extend to a distance of $2h$ into the concrete walls where h is the depth of the boundary element in the plane of the wall (see Figure 7.9a) and b)).

(2)P The requirements for the links in frames with eccentric bracings apply to the coupling beams.

7.11 Design and detailing rules for composite steel plate shear walls

7.11.1 Specific criteria

(1)P Composite steel plate shear walls shall be designed to yield through shear of the steel plate.

(2) The steel plate should be stiffened by one or two sided concrete encasement and attachment to the reinforced concrete encasement in order ▌AC⟩ to prevent buckling of the steel plate ⟨AC▌.

Sofort-Download-Beuth-Book Supply Bureau-KdNr.7066075-ID.SCBLGSA1OBPULJD3QN0TD2AJ.1-2016-08-02 13:22:06

SUPPLIED BY BSB EDGE UNDER LICENCE FROM DIN FOR RAJARAMBAPU INSTITUTE OF TECHNOLOGY - SANGLI DIST. VIDE BSB EDGE ORDER REGISTRATION NO. ORD01-1088 ON 02/08/2016

SUPPLIED BY BSB EDGE UNDER LICENCE FROM DIN FOR RAJARAMBAPU INSTITUTE OF TECHNOLOGY - SANGLI DIST. VIDE BSB EDGE ORDER REGISTRATION NO. ORD01-1088 ON 02/08/2016

7.11.2 Analysis

(1) The analysis of the structure should be based on the materials and section properties defined in **7.4.2** and **7.6**.

7.11.3 Detailing rules

(1)P It shall be checked that

$$V_{Ed} < V_{Rd} \tag{7.18}$$

with the shear resistance given by:

$$V_{Rd} = A_{pl} \times f_{yd} / \sqrt{3} \tag{7.19}$$

where

f_{yd} is the design yield strength of the plate; and

A_{pl} is the horizontal area of the plate.

(2)P The connections between the plate and the boundary members (columns and beams), as well as the connections between the plate and the concrete encasement, shall be designed such that full yield strength of the plate can be developed.

(3)P The steel plate shall be continuously connected on all edges to structural steel framing and boundary members with welds and/or bolts to develop the yield strength of the plate in shear.

(4)P The boundary members shall be designed to meet the requirements of **7.10**.

(5) The concrete thickness should be not less than 200 mm when it is provided on one side and 100 mm on each side when provided on both sides.

(6) The minimum reinforcement ratio in both directions shall be not less than 0,25%.

(7) Openings in the steel plate shall be stiffened as required by analysis.

7.12 Control of design and construction

(1) For the control of design and construction, **6.11** applies.

Sofort-Download-Beuth-Book Supply Bureau-KdNr.7066075-ID.SCBLGSA1OBPULJD3QN0TD2AJ.1-2016-08-02 13:22:06

SUPPLIED BY BSB EDGE UNDER LICENCE FROM DIN FOR RAJARAMBAPU INSTITUTE OF TECHNOLOGY - SANGLI DIST. VIDE BSB EDGE ORDER REGISTRATION NO. ORD01-1088 ON 02/08/2016

Sofort-Download-Beuth-Book Supply Bureau-KdNr.7066075-ID.SCBLGSA1OBPULJD3QN0TD2AJ.1-2016-08-02 13:22:06

8 SPECIFIC RULES FOR TIMBER BUILDINGS

8.1 General

8.1.1 Scope

(1)P For the design of timber buildings EN 1995 applies. The following rules are additional to those given in EN 1995.

8.1.2 Definitions

(1)P The following terms are used in this section with the following meanings:

static ductility
ratio between the ultimate deformation and the deformation at the end of elastic behaviour evaluated in quasi-static cyclic tests (see **8.3(3)**P);

semi-rigid joints
joints with significant flexibility, the influence of which has to be taken into account in structural analysis in accordance with EN 1995 (e.g. dowel-type joints);

rigid joints
joints with negligible flexibility in accordance with EN 1995 (e.g. glued solid timber joints);

Dowel-type joints
joints with dowel-type mechanical fasteners (nails, staples, screws, dowels, bolts etc.) loaded perpendicular to their axis;

Carpenter joints
joints, where loads are transferred by means of pressure areas and without mechanical fasteners (e.g. skew notch, tenon, half joint).

8.1.3 Design concepts

(1)P Earthquake-resistant timber buildings shall be designed in accordance with one of the following concepts:

a) dissipative structural behaviour;

b) low-dissipative structural behaviour.

(2) In concept a) the capability of parts of the structure (dissipative zones) to resist earthquake actions out of their elastic range is taken into account. When using the design spectrum defined in **3.2.2.5**, the behaviour factor q may be taken as being greater than 1,5. The value of q depends on the ductility class (see **8.3**).

(3)P Structures designed in accordance with concept a) shall belong to structural ductility classes M or H. A structure belonging to a given ductility class shall meet specific requirements in one or more of the following aspects: structural type, type and rotational ductility capacity of connections.

(4)P Dissipative zones shall be located in joints and connections, whereas the timber members themselves shall be regarded as behaving elastically.

(5) The properties of dissipative zones should be determined by tests either on single joints, on whole structures or on parts thereof in accordance with prEN 12512.

(6) In concept b) the action effects are calculated on the basis of an elastic global analysis without taking into account non-linear material behaviour. When using the design spectrum defined in **3.2.2.5**, the behaviour factor *q* should not be taken greater than 1,5. The resistance of the members and connections should be ▌AC⟩ calculated in accordance with EN 1995-1-1:2004 ⟨AC▌ without any additional requirements. This concept is termed ductility class L (low) and is appropriate only for certain structural types (see Table 8.1).

8.2 Materials and properties of dissipative zones

(1)P The relevant provisions of EN 1995 apply. With respect to the properties of steel elements, EN 1993 applies.

(2)P When using the concept of dissipative structural behaviour, the following provisions apply:

a) only materials and mechanical fasteners providing appropriate low cycle fatigue behaviour may be used in joints regarded as dissipative zones;

b) glued joints shall be considered as non-dissipative zones;

c) carpenter joints may only be used when they can provide sufficient energy dissipation capacity, without presenting risks of brittle failure in shear or tension perpendicular to the grain. The decision on their use shall be based on appropriate test results.

(3) **(2)**P a) of this subclause is deemed to be satisfied if **8.3(3)**P is fulfilled.

(4) For sheathing-material in shear walls and diaphragms, **(2)**P a) is deemed to be satisfied, if the following conditions are met:

a) particleboard-panels have a density of at least 650 kg/m^3;

b) plywood-sheathing is at least 9 mm thick;

c) particleboard - and fibreboard-sheathing are at least 13 mm thick.

(5)P Steel material for connections shall conform to the following conditions:

a) all connection elements made of steel shall fulfil the relevant requirements in EN 1993;

b) The ductility properties of the connections in trusses and between the sheathing material and the timber framing in Ductility Class M or H structures (see (**8.3**)) shall be tested for compliance with **8.3(3)**P by cyclic tests on the relevant combination of the connected parts and fastener.

Sofort-Download-Beuth-Book Supply Bureau-KdNr.7066075-ID.SCBLGSA1OBPULJD3QN0TD2AJ.1-2016-08-02 13:22:06

SUPPLIED BY BSB EDGE UNDER LICENCE FROM DIN FOR RAJARAMBAPU INSTITUTE OF TECHNOLOGY - SANGLI DIST. VIDE BSB EDGE ORDER REGISTRATION NO. ORD01-1088 ON 02/08/2016

SUPPLIED BY BSB EDGE UNDER LICENCE FROM DIN FOR RAJARAMBAPU INSTITUTE OF TECHNOLOGY - SANGLI DIST. VIDE BSB EDGE ORDER REGISTRATION NO. ORD01-1088 ON 02/08/2016

Sofort-Download-Beuth-Book Supply Bureau-KdNr.7066075-ID.SCBLGSA1OBPULJD3QN0TD2AJ.1-2016-08-02 13:22:06

8.3 Ductility classes and behaviour factors

(1)P Depending on their ductile behaviour and energy dissipation capacity under seismic actions, timber buildings shall be assigned to one of the three ductility classes L, M or H as given in Table 8.1, where the corresponding upper limit values of the behaviour factors are also given.

NOTE Geographical limitations on the use of ductility classes M and H may be found in the relevant National Annex.

Table 8.1: Design concept, Structural types and upper limit values of the behaviour factors for the three ductility classes.

Design concept and ductility class	q	Examples of structures
Low capacity to dissipate energy - DCL	1,5	Cantilevers; Beams; Arches with two or three pinned joints; Trusses joined with connectors.
Medium capacity to dissipate energy - DCM	2	Glued wall panels with glued diaphragms, connected with nails and bolts; Trusses with doweled and bolted joints; Mixed structures consisting of timber framing (resisting the horizontal forces) and non-load bearing infill.
	2,5	Hyperstatic portal frames with doweled and bolted joints (see **8.1.3(3)**P).
High capacity to dissipate energy - DCH	3	Nailed wall panels with glued diaphragms, connected with nails and bolts; Trusses with nailed joints.
	4	Hyperstatic portal frames with doweled and bolted joints (see **8.1.3(3)**P).
	5	Nailed wall panels with nailed diaphragms, connected with nails and bolts.

(2) If the building is non-regular in elevation (see **4.2.3.3**) the q-values listed in Table 8.1 should be reduced by 20%, but need not be taken less than q = 1,5 (see **4.2.3.1(7)** and Table 4.1).

(3)P In order to ensure that the given values of the behaviour factor may be used, the dissipative zones shall be able to deform plastically for at least three fully reversed cycles at a static ductility ratio of 4 for ductility class M structures and at a static ductility ratio of 6 for ductility class H structures, without more than a 20% reduction of their resistance.

(4) The provisions of **(3)**P of this subclause and of **8.2(2)** a) and **8.2(5)** b) may be regarded as satisfied in the dissipative zones of all structural types if the following provisions are met:

a) in doweled, bolted and nailed timber-to-timber and steel-to-timber joints, the minimum thickness of the connected members is 10·*d* and the fastener-diameter *d* does not exceed 12 mm;

b) In shear walls and diaphragms, the sheathing material is wood-based with a minimum thickness of 4*d*, where the nail diameter *d* does not exceed 3,1 mm.

If the above requirements are not met, but the minimum member thickness of 8*d* and 3*d* for case a) and case b), respectively, is assured, reduced upper limit values for the behaviour factor *q*, as given in Table 8.2, should be used.

Table 8.2: Structural types and reduced upper limits of behaviour factors

Structural types	Behaviour factor *q*
Hyperstatic portal frames with doweled and bolted joints	2,5
Nailed wall panels with nailed diaphragms	4,0

(5) For structures having different and independent properties in the two horizontal directions, the *q* factors to be used for the calculation of the seismic action effects in each main direction should correspond to the properties of the structural system in that direction and can be different.

8.4 Structural analysis

(1)P In the analysis the slip in the joints of the structure shall be taken into account.

(2)P An E_0-modulus-value for instantaneous loading (10% higher than the short term one) shall be used.

(3) Floor diaphragms may be considered as rigid in the structural model without further verification, if both of the following conditions are met:

a) the detailing rules for horizontal diaphragms given in **8.5.3** are applied;

and

b) their openings do not significantly affect the overall in-plane rigidity of the floors.

8.5 Detailing rules

8.5.1 General

(1)P The detailing rules given in **8.5.2** and **8.5.3** apply for earthquake-resistant parts of structures designed in accordance with the concept of dissipative structural behaviour (Ductility classes M and H).

(2)P Structures with dissipative zones shall be designed so that these zones are located mainly in those parts of the structure where yielding or local buckling or other phenomena due to hysteretic behaviour do not affect the overall stability of the structure.

Sofort-Download-Beuth-Book Supply Bureau-KdNr.7066075-ID.SCBLGSA1OBPULJD3QN0TD2AJ.1-2016-08-02 13:22:06

SUPPLIED BY BSB EDGE UNDER LICENCE FROM DIN FOR RAJARAMBAPU INSTITUTE OF TECHNOLOGY - SANGLI DIST. VIDE BSB EDGE ORDER REGISTRATION NO. ORD01-1088 ON 02/08/2016

SUPPLIED BY BSB EDGE UNDER LICENCE FROM DIN FOR RAJARAMBAPU INSTITUTE OF TECHNOLOGY - SANGLI DIST. VIDE BSB EDGE ORDER REGISTRATION NO. ORD01-1088 ON 02/08/2016

Sofort-Download-Beuth-Book Supply Bureau-KdNr.7066075-ID.SCBLGSA1OBPULJD3QN0TD2AJ.1-2016-08-02 13:22:06

8.5.2 Detailing rules for connections

(1)P Compression members and their connections (e.g. carpenter joints), which may fail due to deformations caused by load reversals, shall be designed in such a way that they are prevented from separating and remain in their original position.

(2)P Bolts and dowels shall be tightened and tight fitted in the holes. Large bolts and dowels (d > 16 mm) shall not be used in timber-to-timber and steel-to-timber connections, except in combination with timber connectors.

(3) Dowels, smooth nails and staples should not be used without additional provision against withdrawal.

(4) In the case of tension perpendicular to the grain, additional provisions should be met to avoid splitting (e.g. nailed metal or plywood plates).

8.5.3 Detailing rules for horizontal diaphragms

(1)P For horizontal diaphragms under seismic actions EN 1995-1-1:2004 applies with the following modifications:

a) the increasing factor 1,2 for resistance of fasteners at sheet edges shall not be used;

b) when the sheets are staggered, the increasing factor of 1,5 for the nail spacing along the discontinuous panel edges shall not be used;

c) the distribution of the shear forces in the diaphragms shall be evaluated by taking into account the in-plan position of the lateral load resisting vertical elements.

(2)P All sheathing edges not meeting on framing members shall be supported on and connected to transverse blocking placed between the wooden beams. Blocking shall also be provided in the horizontal diaphragms above the lateral load resisting vertical elements (e.g. walls).

(3)P The continuity of beams shall be ensured, including the trimmer joists in areas where the diaphragm is disturbed by holes.

(4)P Without intermediate transverse blocking over the full height of the beams, the height-to-width ratio (h/b) of the timber beams should be less than 4.

(5)P If $a_g.S \geq 0{,}2 \cdot g$ the spacing of fasteners in areas of discontinuity shall be reduced by 25%, but not to less than ▌AC⟩ the minimum spacing given in EN 1995-1-1:2004 ⟨AC▐.

(6)P When floors are considered as rigid in plan for structural analysis, there shall be no change of span-direction of the beams over supports, where horizontal forces are transferred to vertical elements (e.g. shear-walls).

8.6 Safety verifications

(1)P The strength values of the timber material shall be determined taking into account the k_{mod}-values for instantaneous loading in accordance with EN 1995-1-1:2004.

(2)P For ultimate limit state verifications of structures designed in accordance with the concept of low-dissipative structural behaviour (Ductility class L), the partial factors for material properties γ_M for ▌AC⟩ fundamental load combinations from EN 1995-1-1:2004 apply ⟨AC▐.

(3)P For ultimate limit state verifications of structures designed in accordance with the concept of dissipative structural behaviour (Ductility classes M or H), the partial factors for material properties γ_M ▌AC⟩ for accidental load combinations from EN 1995-1-1:2004 apply ⟨AC▐.

(4)P In order to ensure the development of cyclic yielding in the dissipative zones, all other structural members and connections shall be designed with sufficient overstrength. This overstrength requirement applies especially to:

– anchor-ties and any connections to massive sub-elements;
– connections between horizontal diaphragms and lateral load resisting vertical elements.

(5) Carpenter joints do not present risks of brittle failure if the verification of the shear stress in accordance with EN 1995 is made with an additional partial factor of 1,3.

8.7 Control of design and construction

(1)P The provisions given in EN 1995 apply.

(2)P The following structural elements shall be identified on the design drawings and specifications for their special control during construction shall be provided:

– anchor-ties and any connections to foundation elements;
– diagonal tension steel trusses used for bracing;
– connections between horizontal diaphragms and lateral load resisting vertical elements;
– connections between sheathing panels and timber framing in horizontal and vertical diaphragms.

(3)P The special construction control shall refer to the material properties and the accuracy of execution.

Sofort-Download-Beuth-Book Supply Bureau-KdNr.7066075-ID.SCBLGSA1OBPULJD3QN0TD2AJ.1-2016-08-02 13:22:06

SUPPLIED BY BSB EDGE UNDER LICENCE FROM DIN FOR RAJARAMBAPU INSTITUTE OF TECHNOLOGY - SANGLI DIST. VIDE BSB EDGE ORDER REGISTRATION NO. ORD01-1088 ON 02/08/2016

SUPPLIED BY BSB EDGE UNDER LICENCE FROM DIN FOR RAJARAMBAPU INSTITUTE OF TECHNOLOGY - SANGLI DIST. VIDE BSB EDGE ORDER REGISTRATION NO. ORD01-1088 ON 02/08/2016

Sofort-Download-Beuth-Book Supply Bureau-KdNr.7066075-ID.SCBLGSA1OBPULJD3QN0TD2AJ.1-2016-08-02 13:22:06

9 SPECIFIC RULES FOR MASONRY BUILDINGS

9.1 Scope

(1)P This section applies to the design of buildings of unreinforced, confined and reinforced masonry in seismic regions.

(2)P For the design of masonry buildings EN 1996 applies. The following rules are additional to those given in EN 1996.

9.2 Materials and bonding patterns

9.2.1 Types of masonry units

(1) Masonry units should have sufficient robustness in order to avoid local brittle failure.

NOTE The National Annex may select the type of masonry units from EN 1996-1:2004, Table 3.1 that satisfy **(1)**.

9.2.2 Minimum strength of masonry units

(1) Except in cases of low seismicity, the normalised compressive strength of masonry units, derived in accordance with EN 772-1, should be not less than the minimum values as follows:

– normal to the bed face: $f_{b,min}$;

– parallel to the bed face in the plane of the wall: $f_{bh,min}$.

NOTE The values ascribed to $f_{b,min}$ and $f_{b,min}$ for use in a country may be found in its National Annex of this document. The recommended values are $f_{b,min}$ = 5 N/mm^2 $f_{bh,min}$ = 2 N/mm^2.

9.2.3 Mortar

(1) A minimum strength is required for mortar, $f_{m,min}$, which generally exceeds the minimum specified in EN 1996.

NOTE The value ascribed to $f_{m,min}$ for use in a country may be found in its National Annex of this document. The recommended value is $f_{m,min}$ = 5 N/mm^2 for unreinforced or confined masonry and $f_{m,min}$ = 10 N/mm^2 for reinforced masonry.

9.2.4 Masonry bond

(1) There are three alternative classes of perpend joints:

a) joints fully grouted with mortar;

b) ungrouted joints;

c) ungrouted joints with mechanical interlocking between masonry units.

NOTE The National Annex may specify which ones among the three classes above will be allowed to be used in a country or parts of the country.

SUPPLIED BY BSB EDGE UNDER LICENCE FROM DIN FOR RAJARAMBAPU INSTITUTE OF TECHNOLOGY - SANGLI DIST. VIDE BSB EDGE ORDER REGISTRATION NO. ORD01-1088 ON 02/08/2016

Sofort-Download-Beuth-Book Supply Bureau-KdNr.7066075-ID.SCBLGSA1OBPULJD3QN0TD2AJ.1-2016-08-02 13:22:06

9.3 Types of construction and behaviour factors

(1) Depending on the masonry type used for the seismic resistant elements, masonry buildings should be assigned to one of the following types of construction:

a) unreinforced masonry construction;

b) confined masonry construction;

c) reinforced masonry construction;

NOTE 1 Construction with masonry systems which provide an enhanced ductility of the structure is also included (see Note 2 to Table 9.1).

NOTE 2 Frames with infill masonry are not covered in this section.

(2) Due to its low tensile strength and low ductility, unreinforced masonry that follows the provisions of EN 1996 alone is considered to offer low-dissipation capacity (DCL) and its use should be limited, provided that the effective thickness of walls, t_{ef}, is not less than a minimum value, $t_{ef,min}$.

NOTE 1 The conditions under which unreinforced masonry that follows the provisions of EN 1996 alone may be used in a country, may be found in its National Annex to this document. Such use is recommended only in low seismicity cases (see **3.2.1(4)**)

NOTE 2 The value ascribed to $t_{ef,min}$ for use in a country of unreinforced masonry that follows the provisions of EN 1996 alone, may be found in its National Annex of this document. The recommended values of $t_{ef,min}$ are those in the 2nd column, 2nd and 3rd rows of Table 9.2.

(3) For the reasons noted in **(2)** of this subclause, unreinforced masonry satisfying the provisions of the present Eurocode may not be used if the value of $a_g.S$, exceeds a certain limit, $a_{g,urm}$.

NOTE The value ascribed to $a_{g,urm}$ for use in a country may be found in its National Annex of this document. This value should not be less than that corresponding to the threshold for the low seismicity cases. The value ascribed to $a_{g,urm}$ should be consistent with the values adopted for the minimum strength of masonry units, $f_{b,min}$, $f_{bh,min}$ and of mortar, $f_{m,min}$. For the values recommended in the Notes to **9.2.2** and **9.2.3**, the recommended value of $a_{g,urm}$ is 0,20 g.

(4) For types a) to c) the ranges of permissible values of the upper limit value of the behaviour factor q are given in Table 9.1.

Table 9.1: Types of construction and upper limit of the behaviour factor

Type of construction	Behaviour factor q
Unreinforced masonry in accordance with EN 1996 alone (recommended only for low seismicity cases).	1,5
Unreinforced masonry in accordance with EN 1998-1	1,5 - 2,5
Confined masonry	2,0 – 3,0
Reinforced masonry	2,5 - 3,0

NOTE 1 The upper limit values ascribed to q for use in a country (within the ranges of Table 9.1) may be found in its National Annex. The recommended values are the lower limits of the ranges in Table 9.1.

NOTE 2 For buildings constructed with masonry systems which provide an enhanced ductility of the structure, specific values of the behaviour factor q may be used, provided that the system and the related values for q are verified experimentally. The values ascribed to q for use in a country for such buildings may be found ⟦AC⟩ in its National Annex of this document ⟨AC⟧.

(5) If the building is non-regular in elevation (see **4.2.3.3**) the q-values listed in Table 9.1 should be reduced by 20%, but need not be taken less than q = 1,5 (see **4.2.3.1(7)** and Table 4.1)

9.4 Structural analysis

(1)P The structural model for the analysis of the building shall represent the stiffness properties of the entire system.

(2)P The stiffness of the structural elements shall be evaluated taking into account both their flexural and shear flexibility and, if relevant, their axial flexibility. Uncracked elastic stiffness may be used for analysis or, preferably and more realistically, cracked stiffness in order to account for the influence of cracking on deformations and to better approximate the slope of the first branch of a bilinear force-deformation model for the structural element.

(3) In the absence of an accurate evaluation of the stiffness properties, substantiated by rational analysis, the cracked bending and shear stiffness may be taken as one half of the gross section uncracked elastic stiffness.

(4) In the structural model masonry spandrels may be taken into account as coupling beams between two wall elements if they are regularly bonded to the adjoining walls and connected both to the floor tie beam and to the lintel below.

(5) If the structural model takes into account the coupling beams, a frame analysis may be used for the determination of the action effects in the vertical and horizontal structural elements.

(6) The base shear in the various walls, as obtained by the linear analysis described in Section **4**, may be redistributed among the walls, provided that:

Sofort-Download-Beuth-Book Supply Bureau-KdNr.7066075-ID.SCBLGSA1OBPULJD3QN0TD2AJ.1-2016-08-02 13:22:06

SUPPLIED BY BSB EDGE UNDER LICENCE FROM DIN FOR RAJARAMBAPU INSTITUTE OF TECHNOLOGY - SANGLI DIST. VIDE BSB EDGE ORDER REGISTRATION NO. ORD01-1088 ON 02/08/2016

a) the global equilibrium is satisfied (i.e. the same total base shear and position of the force resultant is achieved);

b) the shear in any wall is neither reduced more than 25 %, nor increased by more than 33%; and

c) the consequences of the redistribution for the diaphragm(s) are taken into account.

9.5 Design criteria and construction rules

9.5.1 General

(1)P Masonry buildings shall be composed of floors and walls, which are connected in two orthogonal horizontal directions and in the vertical direction.

(2)P The connection between the floors and walls shall be provided by steel ties or reinforced concrete ring beams.

(3) Any type of floors may be used, provided that the general requirements of continuity and effective diaphragm action are satisfied.

(4)P Shear walls shall be provided in at least two orthogonal directions.

(5) Shear walls should conform to certain geometric requirements, namely:

a) the effective thickness of shear walls, t_{ef}, may not be less than a minimum value, $t_{ef,min}$;

b) the ratio h_{ef}/t_{ef} of the effective wall height (see EN 1996-1-1:2004) to its effective thickess may not exceed a maximum value, $(h_{ef}/t_{ef})_{max}$; and

c) the ratio of the length of the wall, l, to the greater clear height, h, of the openings adjacent to the wall, may not be less than a minimum value, $(l/h)_{min}$.

NOTE The values ascribed to $t_{ef,min}$, $(h_{ef}/t_{ef})_{max}$ and $(l/h)_{min}$, for use in a country may be found in its National Annex of this document. The recommended values of $t_{ef,min}$, $(h_{ef}/t_{ef})_{max}$ and $(l/h)_{min}$ are listed in Table 9.2.

Sofort-Download-Beuth-Book Supply Bureau-KdNr.7066075-ID.SCBLGSA1OBPULJD3QN0TD2AJ.1-2016-08-02 13:22:06

SUPPLIED BY BSB EDGE UNDER LICENCE FROM DIN FOR RAJARAMBAPU INSTITUTE OF TECHNOLOGY - SANGLI DIST. VIDE BSB EDGE ORDER REGISTRATION NO. ORD01-1088 ON 02/08/2016

Table 9.2: Recommended geometric requirements for shear walls

Masonry type	$t_{ef,min}$ (mm)	$(h_{ef}/t_{ef})_{max}$	$(l/h)_{min}$
Unreinforced, with natural stone units	350	9	0,5
Unreinforced, with any other type of units	240	12	0,4
Unreinforced, with any other type of units, in cases of low seismicity	170	15	0,35
Confined masonry	240	15	0,3
Reinforced masonry	240	15	No restriction
Symbols used have the following meaning: t_{ef} thickness of the wall (see EN 1996-1-1:2004); h_{ef} effective height of the wall (see EN 1996-1-1:2004); h greater clear height of the openings adjacent to the wall; l length of the wall.			

(6) Shear walls not conforming to the minimum geometric requirements of **(5)** of this subclause may be considered as secondary seismic elements. They should conform to **9.5.2(1)** and **(2)**.

9.5.2 Additional requirements for unreinforced masonry satisfying EN 1998-1

(1) Horizontal concrete beams or, alternatively, steel ties should be placed in the plane of the wall at every floor level and in any case with a vertical spacing not more than 4 m. These beams or ties should form continuous bounding elements physically connected to each other .

NOTE Beams or ties continuous over the entire periphery are essential.

(2) The horizontal concrete beams should have longitudinal reinforcement with a cross-sectional area of not less than 200 mm^2.

9.5.3 Additional requirements for confined masonry

(1)P The horizontal and vertical confining elements shall be bonded together and anchored to the elements of the main structural system.

(2)P In order to obtain an effective bond between the confining elements and the masonry, the concrete of the confining elements shall be cast after the masonry has been built.

(3) The cross-sectional dimensions of both horizontal and vertical confining elements may not be less than 150 mm. In double-leaf walls the thickness of confining elements should assure the connection of the two leaves and their effective confinement.

(4) Vertical confining elements should be placed:

– at the free edges of each structural wall element;

– at both sides of any wall opening with an area of more than 1,5 m^2;

Sofort-Download-Beuth-Book Supply Bureau-KdNr.7066075-ID.SCBLGSA1OBPULJD3QN0TD2AJ.1-2016-08-02 13:22:06

SUPPLIED BY BSB EDGE UNDER LICENCE FROM DIN FOR RAJARAMBAPU INSTITUTE OF TECHNOLOGY - SANGLI DIST. VIDE BSB EDGE ORDER REGISTRATION NO. ORD01-1088 ON 02/08/2016

– within the wall if necessary in order not to exceed a spacing of 5 m between the confining elements;

– at the intersections of structural walls, wherever the confining elements imposed by the above rules are at a distance larger than 1,5 m.

(5) Horizontal confining elements shall be placed in the plane of the wall at every floor level and in any case with a vertical spacing of not more than 4 m.

(6) The longitudinal reinforcement of confining elements may not have a cross-sectional area less than 300 mm^2, nor than 1% of the cross-sectional area of the confining element.

(7) Stirrups not less than 5 mm in diameter and spaced not more than 150 mm should be provided around the longitudinal reinforcement.

(8) Reinforcing steel should be of Class B or C in accordance with EN 1992-1-1:2004, Table C.1.

(9) Lap splices may not be less than 60 bar diameters in length.

9.5.4 Additional requirements for reinforced masonry

(1) Horizontal reinforcement should be placed in the bed joints or in suitable grooves in the units, with a vertical spacing not exceeding 600 mm.

(2) Masonry units with recesses should accommodate the reinforcement needed in lintels and parapets.

(3) Reinforcing steel bars of not less than 4 mm diameter, bent around the vertical bars at the edges of the wall, should be used.

(4) The minimum percentage of horizontal reinforcement in the wall, normalised with respect to the gross area of the section, should not be less than 0,05 %.

(5)P High percentages of horizontal reinforcement leading to compressive failure of the units prior to the yielding of the steel, shall be avoided.

(6) The vertical reinforcement spread in the wall, as a percentage of the gross area of the horizontal section of the wall, should not be less than 0,08%.

(7) Vertical reinforcement should be located in pockets, cavities or holes in the units.

(8) Vertical reinforcements with a cross-sectional area of not less than 200 mm^2 should be arranged:

– at both free edges of every wall element;

– at every wall intersection;

– within the wall, in order not to exceed a spacing of 5 m between such reinforcements.

Sofort-Download-Beuth-Book Supply Bureau-KdNr.7066075-ID.SCBLGSA1OBPULJD3QN0TD2AJ.1-2016-08-02 13:22:06

SUPPLIED BY BSB EDGE UNDER LICENCE FROM DIN FOR RAJARAMBAPU INSTITUTE OF TECHNOLOGY - SANGLI DIST. VIDE BSB EDGE ORDER REGISTRATION NO. ORD01-1088 ON 02/08/2016

(9) **9.5.3(7)**, **(8)** and **(9)** apply.

(10)P The parapets and lintels shall be regularly bonded to the masonry of the adjoining walls and linked to them by horizontal reinforcement.

9.6 Safety verification

(1)P The verification of the building's safety against collapse shall be explicitly provided, except for buildings satisfying the rules for "simple masonry buildings" given in **9.7.2**.

(2)P For the verification of safety against collapse, the design resistance of each structural element shall be evaluated in accordance with EN 1996-1-1:2004.

(3) In ultimate limit state verifications for the seismic design situation, partial factors γ_m for masonry properties and γ_s for reinforcing steel should be used.

NOTE The values ascribed to the material partial factors γ_m and γ_s for use in a country in the seismic design situation may be found in its National Annex of this document. The recommended value for γ_m is 2/3 of the value specified in the National Annex to EN 1996-1-1:2004, but not less than 1,5. The recommended value for γ_s is 1,0.

9.7 Rules for "simple masonry buildings"

9.7.1 General

(1) Buildings belonging to importance classes I or II and conforming to **9.2, 9.5** and **9.7.2** may be classified as "simple masonry buildings".

(2) For such buildings an explicit safety verification in accordance with **9.6** is not mandatory.

9.7.2 Rules

(1) Depending on the product $a_g \cdot S$ at the site and the type of construction, the allowable number of storeys above ground, n, should be limited and walls in two orthogonal directions with a minimum total cross-sectional area A_{min}, in each direction, should be provided. The minimum cross-sectional area is expressed as a minimum percentage, $p_{A,min}$, of the total floor area per storey.

NOTE The values ascribed to n and $p_{A,min}$ for use in a country may by found in its National Annex of this document. Recommended values are given in Table 9.3. These values, which depend also on a corrective factor k, are based on a minimum unit strength of 12 N/mm² for unreinforced masonry and 5 N/mm² for confined and reinforced masonry, respectively.
For buildings where at least 70% of the shear walls under consideration are longer than 2m, the factor k is given by $k = 1 + (l_{av} - 2)/4 \leq 2$ where l_{av} is the average length, expressed in m, of the shear walls considered. For other cases $k = 1$.
Independently of the value of k, the limitation of use of unreinforced masonry presented in **9.3(3)** should be respected.
A further distinction for different unit strengths, types of construction and use of k may be found in the National Annex.

Sofort-Download-Beuth-Book Supply Bureau-KdNr.7066075-ID.SCBLGSA1OBPULJD3QN0TD2AJ.1-2016-08-02 13:22:06

SUPPLIED BY BSB EDGE UNDER LICENCE FROM DIN FOR RAJARAMBAPU INSTITUTE OF TECHNOLOGY - SANGLI DIST. VIDE BSB EDGE ORDER REGISTRATION NO. ORD01-1088 ON 02/08/2016

Table 9.3: Recommended allowable number of storeys above ground and minimum area of shear walls for "simple masonry buildings".

Acceleration at site $a_g.S$		$\leq 0{,}07\ k \cdot g$	$\leq 0{,}10\ k \cdot g$	$\leq 0{,}15\ k \cdot g$	$\leq 0{,}20\ k \cdot g$
Type of construction	Number of storeys (n)**	Minimum sum of cross-sections areas of horizontal shear walls in each direction, as percentage of the total floor area per storey ($p_{A,min}$)			
Unreinforced masonry	1	2,0%	2,0%	3,5%	n/a
	2	2,0%	2,5%	5,0%	n/a
	3	3,0%	5,0%	n/a	n/a
	4	5,0 %	n/a*	n/a	n/a
Confined masonry	2	2,0%	2,5%	3,0%	3,5%
	3	2,0%	3,0%	4,0%	n/a
	4	4,0%	5,0%	n/a	n/a
	5	6,0%	n/a	n/a	n/a
Reinforced masonry	2	2,0%	2,0%	2,0%	3,5%
	3	2,0%	2,0%	3,0%	5,0%
	4	3,0%	4,0%	5,0%	n/a
	5	4,0%	5,0%	n/a	n/a

* n/a means “not acceptable”.

** Roof space above full storeys is not included in the number of storeys.

(2) The plan configuration of the building should fulfil all the following conditions:

a) The plan should be approximately rectangular;

b) The ratio between the length of the small side and the length of the long side in plan should be not less than a minimum value, λ_{min};

NOTE The value to be ascribed to λ_{min} for use in a country may be found in its National Annex of this document. The recommended value of λ_{min} is 0,25.

c) The area of projections of recesses from the rectangular shape should be not greater than a percentage p_{max} of the total floor area above the level considered.

NOTE The value to be ascribed to p_{max} for use in a country may be found ▌AC⟩ in its National Annex of this document. The recommended ⟨AC▌ value is 15%.

(3) The shear walls of the building should fulfil all of the following conditions:

a) the building should be stiffened by shear walls, arranged almost symmetrically in plan in two orthogonal directions;

b) a minimum of two parallel walls should be placed in two orthogonal directions, the length of each wall being greater than 30 % of the length of the building in the direction of the wall under consideration;

c) at least for the walls in one direction, the distance between these walls should be greater than 75 % of the length of the building in the other direction;

d) at least 75 % of the vertical loads should be supported by the shear walls;

e) shear walls should be continuous from the top to the bottom of the building.

Sofort-Download-Beuth-Book Supply Bureau-KdNr.7066075-ID.SCBLGSA1OBPULJD3QN0TD2AJ.1-2016-08-02 13:22:06

SUPPLIED BY BSB EDGE UNDER LICENCE FROM DIN FOR RAJARAMBAPU INSTITUTE OF TECHNOLOGY - SANGLI DIST. VIDE BSB EDGE ORDER REGISTRATION NO. ORD01-1088 ON 02/08/2016

(4) In cases of low seismicity (see **3.2.1(4)**) the wall length required in **(3)**b of this subclause may be provided by the cumulative length of the shear walls (see **9.5.1(5)**) in one axis, separated by openings. In this case, at least one shear wall in each direction should have a length, *l,* not less than that corresponding to twice the minimum value of *l/h* defined in **9.5.1(5)**c.

(5) In both orthogonal horizontal directions the difference in mass and in the horizontal shear wall cross-sectional area between adjacent storeys should be limited to a maximum value of $\Delta_{m,max}$ and $\Delta_{A,max}$.

NOTE The values to be ascribed to $\Delta_{m,max}$ and to $\Delta_{A,max}$ for use in a country may be found in its National Annex to this document. The recommended values are $\Delta_{m,max}$ = 20%, $\Delta_{A,max}$ = 20%.

(6) For unreinforced masonry buildings, walls in one direction should be connected with walls in the orthogonal direction at a maximum spacing of 7 m.

Sofort-Download-Beuth-Book Supply Bureau-KdNr.7066075-ID.SCBLGSA1OBPULJD3QN0TD2AJ.1-2016-08-02 13:22:06

SUPPLIED BY BSB EDGE UNDER LICENCE FROM DIN FOR RAJARAMBAPU INSTITUTE OF TECHNOLOGY - SANGLI DIST. VIDE BSB EDGE ORDER REGISTRATION NO. ORD01-1088 ON 02/08/2016

SUPPLIED BY BSB EDGE UNDER LICENCE FROM DIN FOR RAJARAMBAPU INSTITUTE OF TECHNOLOGY - SANGLI DIST. VIDE BSB EDGE ORDER REGISTRATION NO. ORD01-1088 ON 02/08/2016

Sofort-Download-Beuth-Book Supply Bureau-KdNr.7066075-ID.SCBLGSA1OBPULJD3QN0TD2AJ.1-2016-08-02 13:22:06

10 BASE ISOLATION

10.1 Scope

(1)P This section covers the design of seismically isolated structures in which the isolation system, located below the main mass of the structure, aims at reducing the seismic response of the lateral-force resisting system.

(2) The reduction of the seismic response of the lateral-force resisting system may be obtained by increasing the fundamental period of the seismically isolated structure, by modifying the shape of the fundamental mode and by increasing the damping, or by a combination of these effects. The isolation system may consist of linear or non-linear springs and/or dampers.

(3) Specific rules concerning base isolation of buildings are given in this section.

(4) This section does not cover passive energy dissipation systems that are not arranged on a single interface, but are distributed over several storeys or levels of the structure.

10.2 Definitions

(1)P The following terms are used in this section with the following meanings:

isolation system
collection of components used for providing seismic isolation, which are arranged over the isolation interface

NOTE These are usually located below the main mass of the structure.

isolation interface
surface which separates the substructure and the superstructure and where the isolation system is located.

NOTE Arrangement of the isolation interface at the base of the structure is usual in buildings, tanks and silos. In bridges the isolation system is usually combined with the bearings and the isolation interface lies between the deck and the piers or abutments.

isolator units
elements constituting the isolation system.
The devices considered in this section consist of laminated elastomeric bearings, elasto-plastic devices, viscous or friction dampers, pendulums, and other devices the behaviour of which conforms to **10.1(2)**. Each unit provides a single or a combination of the following functions:

- vertical–load carrying capability combined with increased lateral flexibility and high vertical rigidity;
- energy dissipation, hysteretic or viscous;
- recentering capability;
- lateral restraint (sufficient elastic stiffness) under non-seismic service lateral loads.

SUPPLIED BY BSB EDGE UNDER LICENCE FROM DIN FOR RAJARAMBAPU INSTITUTE OF TECHNOLOGY - SANGLI DIST. VIDE BSB EDGE ORDER REGISTRATION NO. ORD01-1088 ON 02/08/2016

Substructure
part of the structure which is located under the isolation interface, including the foundation

NOTE The lateral flexibility of the substructure(s) is generally negligible in comparison to that of the isolation system, but this is not always the case (for instance in bridges).

Superstructure
part of the structure which is isolated and is located above the isolation interface

Full isolation
the superstructure is fully isolated if, in the design seismic situation, it remains within the elastic range. Otherwise, the superstructure is partially isolated.

Effective stiffness centre
stiffness centre calculated at the upper face of the isolation interface, i.e. including the flexibility of the isolator units and of the substructure(s).

NOTE In buildings, tanks and similar structures, the flexibility of the substructure may be neglected in the determination of this point, which then coincides with the stiffness centre of the isolator units.

Design displacement (of the isolation system in a principal direction)
maximum horizontal displacement at the effective stiffness centre between the top of the substructure and the bottom of the superstructure, occurring under the design seismic action

Total design displacement (of an isolator unit in a principal direction)
maximum horizontal displacement at the location of the unit, including that due to the design displacement and to the global rotation due to torsion about the vertical axis

Effective stiffness (of the isolation system in a principal direction)
ratio of the value of the total horizontal force transferred through the isolation interface when the design displacement takes place in the same direction, divided by the absolute value of that design displacement (secant stiffness).

NOTE The effective stiffness is generally obtained by iterative dynamic analysis.

Effective Period
fundamental period, in the direction considered, of a single degree of freedom system having the mass of the superstructure and stiffness equal to the effective stiffness of the isolation system;

Effective damping (of the isolation system in a principal direction)
value of the effective viscous damping that corresponds to the energy dissipated by the isolation system during cyclic response at the design displacement.

10.3 Fundamental requirements

(1)P The fundamental requirements in **2.1** and in the relevant Parts of this Eurocode, according to the type of structure considered, shall be satisfied.

Sofort-Download-Beuth-Book Supply Bureau-KdNr.7066075-ID.SCBLGSA1OBPULJD3QN0TD2AJ.1-2016-08-02 13:22:06

(2)P Increased reliability is required for the isolating devices. This shall be effected by applying a magnification factor γ_x on seismic displacements of each unit.

NOTE The value to be ascribed to γ_x for use in a country may be found in its National Annex of this document, depending on the type of isolating device used. For buildings the recommended value is γ_x =1,2.

10.4 Compliance criteria

(1)P In order to conform to the fundamental requirements, the limit states defined in **2.2.1(1)** shall be checked.

(2)P At the damage limitation state, all lifelines crossing the joints around the isolated structure shall remain within the elastic range.

(3) In buildings, at the damage limitation state, the interstorey drift should be limited in the substructure and the superstructure in accordance with **4.4.3.2**.

(4)P At the ultimate limit state, the ultimate capacity of the isolating devices in terms of strength and deformability shall not be exceeded, with the relevant safety factors (see **10.10(6)**P).

(5) Only full isolation is considered in the present section.

(6) Although it may be acceptable that, in certain cases, the substructure has inelastic behaviour, it is considered in the present section that it remains in the elastic range.

(7) At the Ultimate limit state, the isolating devices may attain their ultimate capacity, while the superstructure and the substructure remain in the elastic range. Then there is no need for capacity design and ductile detailing in either the superstructure or the substructure.

(8)P At the Ultimate limit state, gas lines and other hazardous lifelines crossing the joints separating the superstructure from the surrounding ground or constructions shall be designed to accommodate safely the relative displacement between the isolated superstructure and the surrounding ground or constructions, taking into account the γ_x factor defined in **10.3(2)**P.

10.5 General design provisions

10.5.1 General provisions concerning the devices

(1)P Sufficient space between the superstructure and substructure shall be provided, together with other necessary arrangements, to allow inspection, maintenance and replacement of the devices during the lifetime of the structure.

(2) If necessary, the devices should be protected from potential hazardous effects, such as fire, and chemical or biological attack.

(3) Materials used in the design and construction of the devices should conform to the relevant existing norms.

Sofort-Download-Beuth-Book Supply Bureau-KdNr.7066075-ID.SCBLGSA1OBPULJD3QN0TD2AJ.1-2016-08-02 13:22:06

SUPPLIED BY BSB EDGE UNDER LICENCE FROM DIN FOR RAJARAMBAPU INSTITUTE OF TECHNOLOGY - SANGLI DIST. VIDE BSB EDGE ORDER REGISTRATION NO. ORD01-1088 ON 02/08/2016

SUPPLIED BY BSB EDGE UNDER LICENCE FROM DIN FOR RAJARAMBAPU INSTITUTE OF TECHNOLOGY - SANGLI DIST. VIDE BSB EDGE ORDER REGISTRATION NO. ORD01-1088 ON 02/08/2016

Sofort-Download-Beuth-Book Supply Bureau-KdNr.7066075-ID.SCBLGSA1OBPULJD3QN0TD2AJ.1-2016-08-02 13:22:06

10.5.2 Control of undesirable movements

(1) To minimise torsional effects, the effective stiffness centre and the centre of damping of the isolation system should be as close as possible to the projection of the centre of mass on the isolation interface.

(2) To minimise different behaviour of isolating devices, the compressive stress induced in them by the permanent actions should be as uniform as possible.

(3)P Devices shall be fixed to the superstructure and the substructure.

(4)P The isolation system shall be designed so that shocks and potential torsional movements are controlled by appropriate measures.

(5) Requirement **(4)**P concerning shocks is deemed to be satisfied if potential shock effects are avoided through appropriate devices (e.g. dampers, shock-absorbers, etc.).

10.5.3 Control of differential seismic ground motions

(1) The structural elements located above and below the isolation interface should be sufficiently rigid in both horizontal and vertical directions, so that the effects of differential seismic ground displacements are minimised. This does not apply to bridges or elevated structures, where the piles and piers located under the isolation interface may be deformable.

(2) In buildings, **(1)** is considered satisfied if all the conditions stated below are satisfied:

a) A rigid diaphragm is provided above and under the isolation system, consisting of a reinforced concrete slab or a grid of tie-beams, designed taking into account all relevant local and global modes of buckling. This rigid diaphragm is not necessary if the structures consist of rigid boxed structures;

b) The devices constituting the isolation system are fixed at both ends to the rigid diaphragms defined above, either directly or, if not practicable, by means of vertical elements, the relative horizontal displacement of which in the seismic design situation should be lower than 1/20 of the relative displacement of the isolation system.

10.5.4 Control of displacements relative to surrounding ground and constructions

(1)P Sufficient space shall be provided between the isolated superstructure and the surrounding ground or constructions, to allow its displacement in all directions in the seismic design situation.

10.5.5 Conceptual design of base isolated buildings

(1) The principles of conceptual design for base isolated buildings should be based on those in Section **2** and in **4.2**, with additional provisions given in this section.

SUPPLIED BY BSB EDGE UNDER LICENCE FROM DIN FOR RAJARAMBAPU INSTITUTE OF TECHNOLOGY - SANGLI DIST. VIDE BSB EDGE ORDER REGISTRATION NO. ORD01-1088 ON 02/08/2016

Sofort-Download-Beuth-Book Supply Bureau-KdNr.7066075-ID.SCBLGSA1OBPULJD3QN0TD2AJ.1-2016-08-02 13:22:06

10.6 Seismic action

(1)P The two horizontal and the vertical components of the seismic action shall be assumed to act simultaneously.

(2) Each component of the seismic action is defined in **3.2**, in terms of the elastic spectrum for the applicable local ground conditions and design ground acceleration a_g.

(3) In buildings of importance class IV, site-specific spectra including near source effects should also be taken into account, if the building is located at a distance less than 15 km from the nearest potentially active fault with a magnitude $M_s \geq 6{,}5$. Such spectra should not be taken as being less than the standard spectra defined in **(2)** of this subclause.

(4) In buildings, combinations of the components of the seismic action are given in **4.3.3.5**.

(5) If time-history analyses are required, a set of at least three ground motion records should be used and should conform to the requirements of **3.2.3.1** and **3.2.3.2**.

10.7 Behaviour factor

(1)P Except as provided in **10.10(5)**, the value of the behaviour factor shall be taken as being equal to $q = 1$.

10.8 Properties of the isolation system

(1)P Values of physical and mechanical properties of the isolation system to be used in the analysis shall be the most unfavourable ones to be attained during the lifetime of the structure. They shall reflect, where relevant, the influence of:

- rate of loading;
- magnitude of the simultaneous vertical load;
- magnitude of simultaneous horizontal load in the transverse direction;
- temperature;
- change of properties over projected service life.

(2) Accelerations and inertia forces induced by the earthquake should be evaluated taking into account the maximum value of the stiffness and the minimum value of damping and friction coefficients.

(3) Displacements should be evaluated taking into account the minimum value of stiffness, damping and friction coefficients.

(4) In buildings of importance classes I or II, mean values of physical and mechanical properties may be used, provided that extreme (maximum or minimum) values do not differ by more than 15% from the mean values.

SUPPLIED BY BSB EDGE UNDER LICENCE FROM DIN FOR RAJARAMBAPU INSTITUTE OF TECHNOLOGY - SANGLI DIST. VIDE BSB EDGE ORDER REGISTRATION NO. ORD01-1088 ON 02/08/2016

Sofort-Download-Beuth-Book Supply Bureau-KdNr.7066075-ID.SCBLGSA1OBPULJD3QN0TD2AJ.1-2016-08-02 13:22:06

10.9 Structural analysis

10.9.1 General

(1)P The dynamic response of the structural system shall be analysed in terms of accelerations, inertia forces and displacements.

(2)P In buildings, torsional effects, including the effects of the accidental eccentricity defined in **4.3.2**, shall be taken into account.

(3) Modelling of the isolation system should reflect with a sufficient accuracy the spatial distribution of the isolator units, so that the translation in both horizontal directions, the corresponding overturning effects and the rotation about the vertical axis are adequately accounted for. It should reflect adequately the characteristics of the different types of units used in the isolation system.

10.9.2 Equivalent linear analysis

(1) Subject to the conditions in **(5)** of this subclause, the isolation system may be modelled with equivalent linear visco-elastic behaviour, if it consists of devices such as laminated elastomeric bearings, or with bilinear hysteretic behaviour if the system consists of elasto-plastic types of devices.

(2) If an equivalent linear model is used, the effective stiffness of each isolator unit (i.e. the secant value of the stiffness at the total design displacement d_{db}) should be used, while respecting **10.8(1)**P. The effective stiffness K_{eff} of the isolation system is the sum of the effective stiffnesses of the isolator units.

(3) If an equivalent linear model is used, the energy dissipation of the isolation system should be expressed in terms of an equivalent viscous damping, as the "effective damping" (ξ_{eff}). The energy dissipation in bearings should be expressed from the measured energy dissipated in cycles with frequency in the range of the natural frequencies of the modes considered. For higher modes outside this range, the modal damping ratio of the complete structure should be that of a fixed base superstructure.

(4) When the effective stiffness or the effective damping of certain isolator units depend on the design displacement d_{dc}, an iterative procedure should be applied, until the difference between assumed and calculated values of d_{dc} does not exceed 5% of the assumed value.

(5) The behaviour of the isolation system may be considered as being equivalent to linear if all the following conditions are met:

a) the effective stiffness of the isolation system, as defined in **(2)** of this subclause, is not less than 50% of the effective stiffness at a displacement of $0{,}2d_{dc}$;

b) the effective damping ratio of the isolation system, as defined in **(3)** of this subclause, does not exceed 30%;

c) the force-displacement characteristics of the isolation system do not vary by more than 10% due to the rate of loading or due to the vertical loads;

d) the increase of the restoring force in the isolation system for displacements between $0{,}5d_{dc}$ and d_{dc} is not less than 2,5% of the total gravity load above the isolation system.

(6) If the behaviour of the isolation system is considered as equivalent linear and the seismic action is defined through the elastic spectrum as per **10.6(2)**, a damping correction should be performed in accordance with **3.2.2.2(3)**.

10.9.3 Simplified linear analysis

(1) The simplified linear analysis method considers two horizontal dynamic translations and superimposes static torsional effects. It assumes that the superstructure is a rigid solid translating above the isolation system, subject to the conditions of **(2)** and **(3)** of this subclause. Then the effective period for translation is:

$$T_{\text{eff}} = 2\pi\sqrt{\frac{M}{K_{\text{eff}}}} \tag{10.1}$$

where

M is the mass of the superstructure;

K_{eff} is the effective horizontal stiffness of the isolation system as defined in **10.9.2(2)**.

(2) The torsional movement about the vertical axis may be neglected in the evaluation of the effective horizontal stiffness and in the simplified linear analysis if, in each of the two principal horizontal directions, the total eccentricity (including the accidental eccentricity) between the stiffness centre of the isolation system and the vertical projection of the centre of mass of the superstructure does not exceed 7,5% of the length of the superstructure transverse to the horizontal direction considered. This is a condition for the application of the simplified linear analysis method.

(3) The simplified method may be applied to isolation systems with equivalent linear damped behaviour, if they also conform to all of the following conditions:

a) the distance from the site to the nearest potentially active fault with a magnitude $M_s \geq 6{,}5$ is greater than 15 km;

b) the largest dimension of the superstructure in plan is not greater than 50 m;

c) the substructure is sufficiently rigid to minimise the effects of differential displacements of the ground;

d) all devices are located above elements of the substructure which support vertical loads;

e) the effective period T_{eff} satisfies the following condition:

$$3T_{\text{f}} \leq T_{\text{eff}} \leq 3\ s \tag{10.2}$$

where T_{f} is the fundamental period of the superstructure assuming a fixed base (estimated through a simplified expression).

Sofort-Download-Beuth-Book Supply Bureau-KdNr.7066075-ID.SCBLGSA1OBPULJD3QN0TD2AJ.1-2016-08-02 13:22:06

SUPPLIED BY BSB EDGE UNDER LICENCE FROM DIN FOR RAJARAMBAPU INSTITUTE OF TECHNOLOGY - SANGLI DIST. VIDE BSB EDGE ORDER REGISTRATION NO. ORD01-1088 ON 02/08/2016

(4) In buildings, in addition to **(3)** of this subclause, all of the following conditions should be satisfied for the simplified method to be applied to isolation systems with equivalent linear damped behaviour:

a) the lateral-load resisting system of the superstructure should be regularly and symmetrically arranged along the two main axes of the structure in plan;

b) the rocking rotation at the base of the substructure should be negligible;

c) the ratio between the vertical and the horizontal stiffness of the isolation system should satisfy the following expression:

$$\frac{K_{\mathrm{v}}}{K_{\mathrm{eff}}} \geq 150 \tag{10.3}$$

d) the fundamental period in the vertical direction, T_{V}, should be not longer than 0,1 s, where:

$$T_{\mathrm{V}} = 2\pi\sqrt{\frac{M}{K_{\mathrm{V}}}} \tag{10.4}$$

(5) The displacement of the stiffness centre due to the seismic action should be calculated in each horizontal direction, from the following expression:

$$d_{\mathrm{dc}} = \frac{M\ S_{\mathrm{e}}(T_{\mathrm{eff}}, \xi_{\mathrm{eff}})}{K_{\mathrm{eff,min}}} \tag{10.5}$$

where $S_{\mathrm{e}}(T_{\mathrm{eff}}, \xi_{\mathrm{eff}})$ is the spectral acceleration defined in **3.2.2.2**, taking into account the appropriate value of effective damping ξ_{eff} in accordance with **10.9.2(3)**.

(6) The horizontal forces applied at each level of the superstructure should be calculated, in each horizontal direction through the following expression:

$$f_{\mathrm{j}} = m_{\mathrm{j}}\ S_{\mathrm{e}}(T_{\mathrm{eff}}, \xi_{\mathrm{eff}}) \tag{10.6}$$

where m_{j} is the mass at level j

(7) The system of forces considered in **(6)** induces torsional effects due to the combined natural and accidental eccentricities.

(8) If the condition in **(2)** of this subclause for neglecting torsional movement about the vertical axis is satisfied, the torsional effects in the individual isolator units may be accounted for by amplifying in each direction the action effects defined in **(5)** and **(6)** with a factor δ_{i} given (for the action in the x direction) by:

$$\delta_{\mathrm{xi}} = 1 + \frac{e_{\mathrm{tot,y}}}{r_{\mathrm{y}}^2} y_{\mathrm{i}} \tag{10.7}$$

where

Sofort-Download-Beuth-Book Supply Bureau-KdNr.7066075-ID.SCBLGSA1OBPULJD3QN0TD2AJ.1-2016-08-02 13:22:06

SUPPLIED BY BSB EDGE UNDER LICENCE FROM DIN FOR RAJARAMBAPU INSTITUTE OF TECHNOLOGY - SANGLI DIST. VIDE BSB EDGE ORDER REGISTRATION NO. ORD01-1088 ON 02/08/2016

y is the horizontal direction transverse to the direction x under consideration;

(x_i, y_i) are the co-ordinates of the isolator unit i relative to the effective stiffness centre;

$e_{tot,y}$ is the total eccentricity in the y direction;

r_y is the torsional radius of the isolation system in the y direction, as given by the following expression:

$$r_y^2 = \sum \left(x_i^2 K_{yi} + y_i^2 K_{xi} \right) / \sum K_{xi} \tag{10.8}$$

K_{xi} and K_{yi} being the effective stiffness of a given unit i in the x and y directions, respectively.

(9) Torsional effects in the superstructure should be estimated in accordance with **4.3.3.2.4**.

10.9.4 Modal simplified linear analysis

(1) If the behaviour of the devices may be considered as equivalent linear but any one of the conditions of **10.9.3(2)**, **(3)** or – if applicable - **(4)** is not met, a modal analysis may be performed in accordance with **4.3.3.3**.

(2) If all conditions **10.9.3(3)** and - if applicable - **(4)** are met, a simplified analysis may be used considering the horizontal displacements and the torsional movement about the vertical axis and assuming that the substructures and the superstructures behave rigidly. In that case, the total eccentricity (including the accidental eccentricity as per **4.3.2(1)**P) of the mass of the superstructure should be taken into account in the analysis. Displacements at every point of the structure should then be calculated combining the translational and rotational displacements. This applies notably for the evaluation of the effective stiffness of each isolator unit. The inertial forces and moments should be taken into account for the verification of the isolator units and of the substructures and the superstructures.

10.9.5 Time-history analysis

(1)P If an isolation system may not be represented by an equivalent linear model (i.e. if the conditions in **10.9.2(5)** are not met), the seismic response shall be evaluated by means of a time-history analysis, using a constitutive law of the devices which can adequately reproduce the behaviour of the system in the range of deformations and velocities anticipated in the seismic design situation.

10.9.6 Non structural elements

(1)P In buildings, non-structural elements shall be analysed in accordance with **4.3.5**, with due consideration to the dynamic effects of the isolation (see **4.3.5.1(2)** and **(3)**).

10.10 Safety verifications at Ultimate Limit State

(1)P The substructure shall be verified under the inertia forces directly applied to it and the forces and moments transmitted to it by the isolation system.

Sofort-Download-Beuth-Book Supply Bureau-KdNr.7066075-ID.SCBLGSA1OBPULJD3QN0TD2AJ.1-2016-08-02 13:22:06

SUPPLIED BY BSB EDGE UNDER LICENCE FROM DIN FOR RAJARAMBAPU INSTITUTE OF TECHNOLOGY - SANGLI DIST. VIDE BSB EDGE ORDER REGISTRATION NO. ORD01-1088 ON 02/08/2016

(2)P The Ultimate Limit State of the substructure and the superstructure shall be checked using the values of γ_M defined in the relevant sections of this Eurocode.

(3)P In buildings, safety verifications regarding equilibrium and resistance in the substructure and in the superstructure shall be performed in accordance with **4.4**. Capacity design and global or local ductility conditions do not need to be satisfied.

(4) In buildings, the structural elements of the substructure and the superstructure may be designed as non-dissipative. For concrete, steel or steel-concrete composite buildings Ductility Class L may be adopted and **5.3**, **6.1.2(2)**P, **(3)** and **(4)** or **7.1.2(2)**P and **(3)**, respectively, applied.

(5) In buildings, the resistance condition of the structural elements of the superstructure may be satisfied taking into account seismic action effects divided by a behaviour factor not greater than 1,5.

(6)P Taking into account possible buckling failure of the devices and using nationally determined γ_M values, the resistance of the isolation system shall be evaluated taking into account the γ_x factor defined in **10.3(2)**P.

(7) According to the type of device considered, the resistance of the isolator units should be evaluated at the Ultimate Limit State in terms of either of the following:

a) forces, taking into account the maximum possible vertical and horizontal forces in the seismic design situation, including overturning effects;

b) total relative horizontal displacement between lower and upper faces of the unit. The total horizontal displacement should include the deformation due to the design seismic action and the effects of shrinkage, creep, temperature and post tensioning (if the superstructure is prestressed).

Sofort-Download-Beuth-Book Supply Bureau-KdNr.7066075-ID.SCBLGSA1OBPULJD3QN0TD2AJ.1-2016-08-02 13:22:06

SUPPLIED BY BSB EDGE UNDER LICENCE FROM DIN FOR RAJARAMBAPU INSTITUTE OF TECHNOLOGY - SANGLI DIST. VIDE BSB EDGE ORDER REGISTRATION NO. ORD01-1088 ON 02/08/2016

ANNEX A (informative)
ELASTIC DISPLACEMENT RESPONSE SPECTRUM

A.1 For structures of long vibration period, the seismic action may be represented in the form of a displacement response spectrum, $S_{De}(T)$, as shown in Figure A.1.

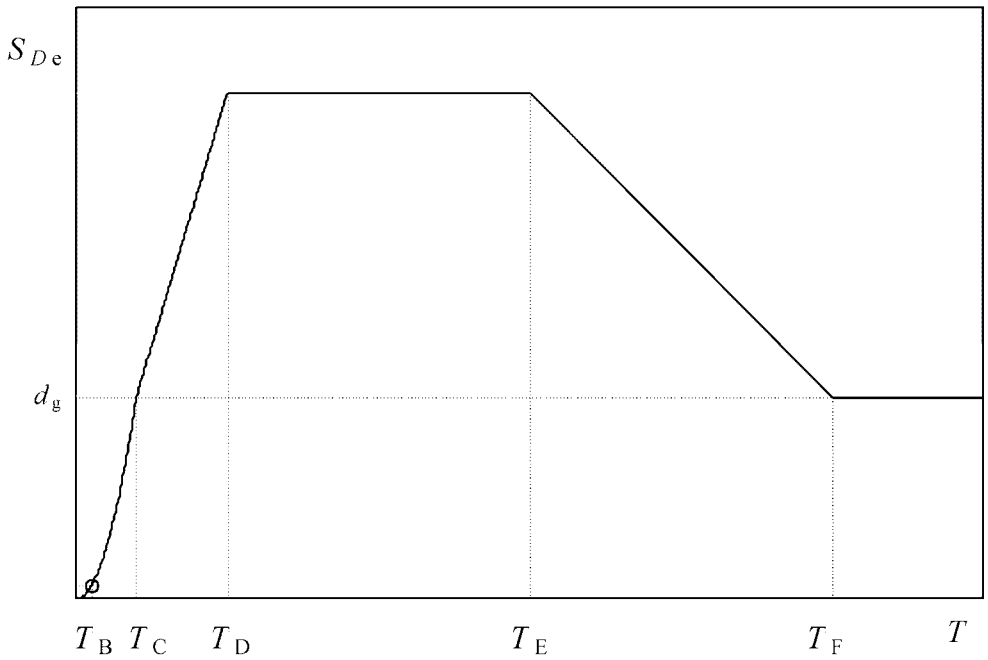

Figure A.1: Elastic displacement response spectrum.

A.2 Up to the control period T_E, the spectral ordinates are obtained from expressions (3.1)-(3.4) converting $S_e(T)$ to $S_{De}(T)$ through expression (3.7). For vibration periods beyond T_E, the ordinates of the elastic displacement response spectrum are obtained from expressions (A.1) and (A.2).

$$T_E \le T \le T_F : \; S_{De}(T) = 0{,}025 a_g \cdot S \cdot T_C \cdot T_D \left[2{,}5\eta + \left(\frac{T - T_E}{T_F - T_E} \right) (1 - 2{,}5\eta) \right] \quad \text{(A.1)}$$

$$T \ge T_F : \; S_{De}(T) = d_g \quad \text{(A.2)}$$

where S, T_C, T_D are given in Tables 3.2 and 3.3, η is given by expression (3.6) and d_g is given by expression (3.12). The control periods T_E and T_F are presented in Table A.1.

Sofort-Download-Beuth-Book Supply Bureau-KdNr.7066075-ID.SCBLGSA1OBPULJD3QN0TD2AJ.1-2016-08-02 13:22:06

SUPPLIED BY BSB EDGE UNDER LICENCE FROM DIN FOR RAJARAMBAPU INSTITUTE OF TECHNOLOGY - SANGLI DIST. VIDE BSB EDGE ORDER REGISTRATION NO. ORD01-1088 ON 02/08/2016

Table A.1: Additional control periods for Type 1 displacement spectrum.

Ground type	T_E (s)	T_F (s)
A	4,5	10,0
B	5,0	10,0
C	6,0	10,0
D	6,0	10,0
E	6,0	10,0

Sofort-Download-Beuth-Book Supply Bureau-KdNr.7066075-ID.SCBLGSA1OBPULJD3QN0TD2AJ.1-2016-08-02 13:22:06

SUPPLIED BY BSB EDGE UNDER LICENCE FROM DIN FOR RAJARAMBAPU INSTITUTE OF TECHNOLOGY - SANGLI DIST. VIDE BSB EDGE ORDER REGISTRATION NO. ORD01-1088 ON 02/08/2016

SUPPLIED BY BSB EDGE UNDER LICENCE FROM DIN FOR RAJARAMBAPU INSTITUTE OF TECHNOLOGY - SANGLI DIST. VIDE BSB EDGE ORDER REGISTRATION NO. ORD01-1088 ON 02/08/2016

Sofort-Download-Beuth-Book Supply Bureau-KdNr.7066075-ID.SCBLGSA1OBPULJD3QN0TD2AJ.1-2016-08-02 13:22:06

ANNEX B (informative) DETERMINATION OF THE TARGET DISPLACEMENT FOR NONLINEAR STATIC (PUSHOVER) ANALYSIS

B.1 General

The target displacement is determined from the elastic response spectrum (see **3.2.2.2**). The capacity curve, which represents the relation between base shear force and control node displacement, is determined in accordance with **4.3.3.4.2.3**.

The following relation between normalized lateral forces $\overline{F}_i$ and normalized displacements Φ_i is assumed:

$$\overline{F}_i = m_i \Phi_i \tag{B.1}$$

where m_i is the mass in the *i*-th storey.

Displacements are normalized in such a way that $\Phi_n = 1$, where *n* is the control node (usually, *n* denotes the roof level). Consequently, $\overline{F}_n = m_n$.

B.2 Transformation to an equivalent Single Degree of Freedom (SDOF) system

The mass of an equivalent SDOF system m^* is determined as:

$$m^* = \sum m_i \Phi_i = \sum \overline{F}_i \tag{B.2}$$

and the transformation factor is given by:

$$\Gamma = \frac{m^*}{\sum m_i \Phi_i^2} = \frac{\sum \overline{F}_i}{\sum \left(\frac{\overline{F}_i^2}{m_i} \right)} \tag{B.3}$$

The force F^* and displacement d^* of the equivalent SDOF system are computed as:

$$F^* = \frac{F_b}{\Gamma} \tag{B.4}$$

$$d^* = \frac{d_n}{\Gamma} \tag{B.5}$$

where F_b and d_n are, respectively, the base shear force and the control node displacement of the Multi Degree of Freedom (MDOF) system.

B.3 Determination of the idealized elasto-perfectly plastic force – displacement relationship

The yield force F_y^*, which represents also the ultimate strength of the idealized system, is equal to the base shear force at the formation of the plastic mechanism. The initial

stiffness of the idealized system is determined in such a way that the areas under the actual and the idealized force – deformation curves are equal (see Figure B.1).

Based on this assumption, the yield displacement of the idealised SDOF system d_y^* is given by:

$$d_y^* = 2\left(d_m^* - \frac{E_m^*}{F_y^*}\right) \tag{B.6}$$

where E_m^* is the actual deformation energy up to the formation of the plastic mechanism.

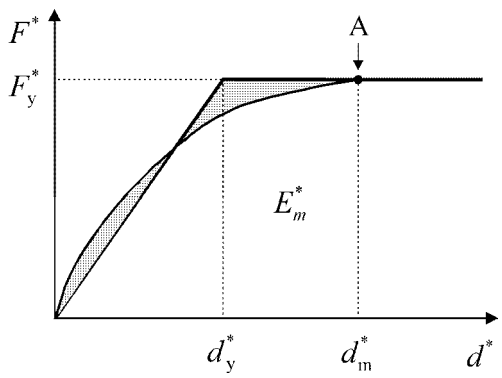

Key

A plastic mechanism

Figure B.1: Determination of the idealized elasto - perfectly plastic force – displacement relationship.

B.4 Determination of the period of the idealized equivalent SDOF system

The period T^* of the idealized equivalent SDOF system is determined by:

$$T^* = 2\pi\sqrt{\frac{m^* d_y^*}{F_y^*}} \tag{B.7}$$

B.5 Determination of the target displacement for the equivalent SDOF system

The target displacement of the structure with period T^* and unlimited elastic behaviour is given by:

$$d_{et}^* = S_e(T^*)\left[\frac{T^*}{2\pi}\right]^2 \tag{B.8}$$

where $S_e(T^*)$ is the elastic acceleration response spectrum at the period T^*.

For the determination of the target displacement d_t^* for structures in the short-period range and for structures in the medium and long-period ranges different expressions

Sofort-Download-Beuth-Book Supply Bureau-KdNr.7066075-ID.SCBLGSA1OBPULJD3QN0TD2AJ.1-2016-08-02 13:22:06

SUPPLIED BY BSB EDGE UNDER LICENCE FROM DIN FOR RAJARAMBAPU INSTITUTE OF TECHNOLOGY - SANGLI DIST. VIDE BSB EDGE ORDER REGISTRATION NO. ORD01-1088 ON 02/08/2016

should be used as indicated below. The corner period between the short- and medium-period range is T_C (see Figure 3.1 and Tables 3.2 and 3.3).

a) $T^* < T_C$ (short period range)

If $F_y^* / m^* \geq S_e(T^*)$, the response is elastic and thus

$$d_t^* = d_{et}^* \tag{B.9}$$

If $F_y^* / m^* < S_e(T^*)$, the response is nonlinear and

$$d_t^* = \frac{d_{et}^*}{q_u}\left(1 + (q_u - 1)\frac{T_C}{T^*}\right) \geq d_{et}^* \tag{B.10}$$

where q_u is the ratio between the acceleration in the structure with unlimited elastic behaviour $S_e(T^*)$ and in the structure with limited strength F_y^* / m^*.

$$q_u = \frac{S_e(T^*)m^*}{F_y^*} \tag{B.11}$$

[AC⟩ d_t* need not exceed 3 d_{et}*. ⟨AC]

b) $T^* \geq T_C$ (medium and long period range)

$$d_t^* = d_{et}^* \tag{B.12}$$

[AC⟩ *Deleted text* ⟨AC]

The relation between different quantities can be visualized in Figures B.2 a) and b). The figures are plotted in acceleration - displacement format. Period T^* is represented by the radial line from the origin of the coordinate system to the point at the elastic response spectrum defined by [AC⟩ coordinates $d^*_{et} = S_e(T^*)(T^*/2\pi)^2$ ⟨AC] and $S_e(T^*)$.

Iterative procedure (optional)

[AC⟩ If the target displacement d_t* determined in the 4th step (cl. B.5) is much different ⟨AC] from the displacement d_m^* (Figure B.1) used for the determination of the idealized elasto-perfectly plastic [AC⟩ force – displacement relationship in the 2nd step (cl. B.3), an iterative procedure ⟨AC] may be applied, in which steps 2 to 4 are repeated by using in the 2nd step d_t^* (and the corresponding F_y^*) instead of d_m^*.

Sofort-Download-Beuth-Book Supply Bureau-KdNr.7066075-ID.SCBLGSA1OBPULJD3QN0TD2AJ.1-2016-08-02 13:22:06

SUPPLIED BY BSB EDGE UNDER LICENCE FROM DIN FOR RAJARAMBAPU INSTITUTE OF TECHNOLOGY - SANGLI DIST. VIDE BSB EDGE ORDER REGISTRATION NO. ORD01-1088 ON 02/08/2016

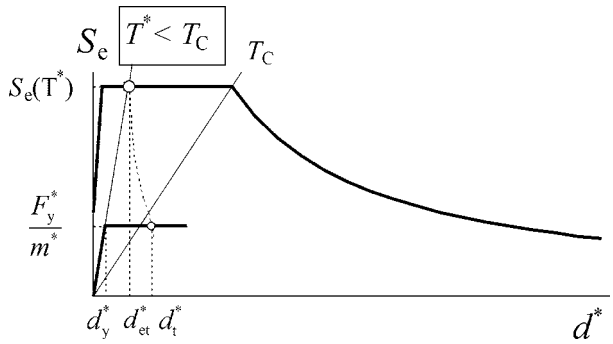

a) Short period range

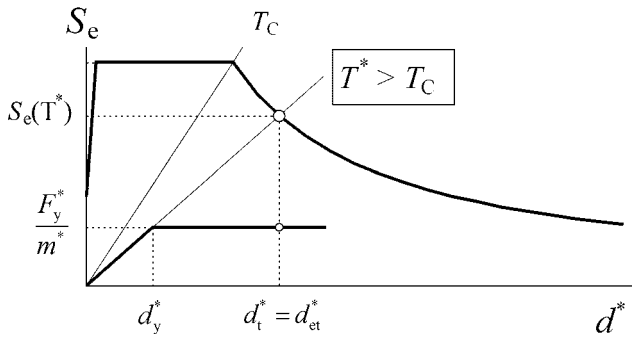

b) Medium and long period range

Figure B.2: Determination of the target displacement for the equivalent SDOF system

B.6 Determination of the target displacement for the MDOF system

The target displacement of the MDOF system is given by:

$$d_t = \Gamma d_t^* \tag{B.13}$$

The target displacement corresponds to the control node.

Sofort-Download-Beuth-Book Supply Bureau-KdNr.7066075-ID.SCBLGSA1OBPULJD3QN0TD2AJ.1-2016-08-02 13:22:06

SUPPLIED BY BSB EDGE UNDER LICENCE FROM DIN FOR RAJARAMBAPU INSTITUTE OF TECHNOLOGY - SANGLI DIST. VIDE BSB EDGE ORDER REGISTRATION NO. ORD01-1088 ON 02/08/2016

SUPPLIED BY BSB EDGE UNDER LICENCE FROM DIN FOR RAJARAMBAPU INSTITUTE OF TECHNOLOGY - SANGLI DIST. VIDE BSB EDGE ORDER REGISTRATION NO. ORD01-1088 ON 02/08/2016

Sofort-Download-Beuth-Book Supply Bureau-KdNr.7066075-ID.SCBLGSA1OBPULJD3QN0TD2AJ.1-2016-08-02 13:22:06

ANNEX C (normative)
DESIGN OF THE SLAB OF STEEL-CONCRETE COMPOSITE BEAMS AT BEAM-COLUMN JOINTS IN MOMENT RESISTING FRAMES

C.1 General

(1) This annex refers to the design of the slab and of its connection to the steel frame in moment resisting frames in which beams are composite T-beams comprising a steel section with a slab.

(2) The annex has been developed and validated experimentally in the context of composite moment frames with rigid connections and plastic hinges forming in the beams. The expressions in this annex have not been validated for cases with partial strength connections in which deformations are more localised in the joints.

(3) Plastic hinges at beam ends in a composite moment frame shall be ductile. According to this annex two requirements shall be fulfilled to ensure that a high ductility in bending is obtained:

– early buckling of the steel part shall be avoided;

– early crushing of the concrete of the slab shall be avoided.

(4) The first condition imposes an upper limit on the cross-sectional area A_s of the longitudinal reinforcement in the effective width of the slab. The second condition imposes a lower limit on the cross-sectional area A_T of the transverse reinforcement in front of the column.

C.2 Rules for prevention of premature buckling of the steel section

(1) Paragraph **7.6.1(4)** applies.

C.3 Rules for prevention of premature crushing of concrete

C.3.1 Exterior column - Bending of the column in direction perpendicular to façade; applied beam bending moment negative: $M < 0$

C.3.1.1 No façade steel beam; no concrete cantilever edge strip (Figure C.1(b)).

(1) When there is no façade steel beam and no concrete cantilever edge strip, the moment capacity of the joint should be taken as the plastic moment resistance of the steel beam alone.

C.3.1.2 No façade steel beam; concrete cantilever edge strip present (Figure C.1(c)).

(1) When there is a concrete cantilever edge strip but no façade steel beam, EN 1994-1-1:2004 applies for the calculation of the moment capacity of the joint.

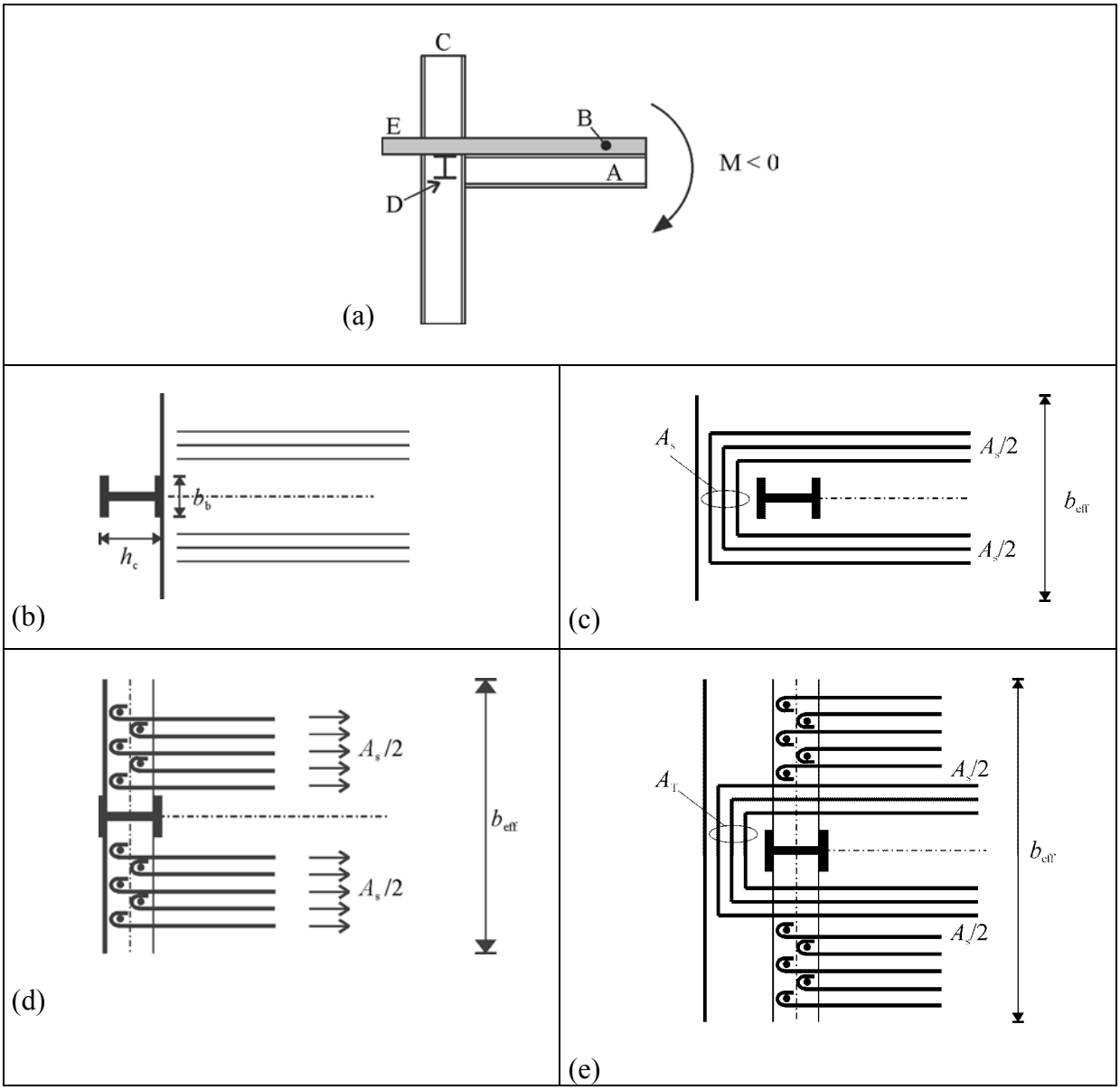

Key:
(a) elevation
(b) no concrete cantilever edge strip – no façade steel beam – see **C.3.1.1**.
(c) concrete cantilever edge strip – no façade steel beam – see **C.3.1.2**.
(d) no concrete cantilever edge strip – façade steel beam – see **C.3.1.3**.
(e) concrete cantilever edge strip – façade steel beam – see **C.3.1.4**.
A main beam;
B slab;
C exterior column;
D façade steel beam;
E concrete cantilever edge strip

Figure C.1: Configurations of exterior composite beam-to-column joints under negative bending moment in a direction perpendicular to façade

Sofort-Download-Beuth-Book Supply Bureau-KdNr.7066075-ID.SCBLGSA1OBPULJD3QN0TD2AJ.1-2016-08-02 13:22:06

SUPPLIED BY BSB EDGE UNDER LICENCE FROM DIN FOR RAJARAMBAPU INSTITUTE OF TECHNOLOGY - SANGLI DIST. VIDE BSB EDGE ORDER REGISTRATION NO. ORD01-1088 ON 02/08/2016

SUPPLIED BY BSB EDGE UNDER LICENCE FROM DIN FOR RAJARAMBAPU INSTITUTE OF TECHNOLOGY - SANGLI DIST. VIDE BSB EDGE ORDER REGISTRATION NO. ORD01-1088 ON 02/08/2016

C.3.1.3 Façade steel beam present; slab extending up to column outside face; no concrete cantilever edge strip (Figure C.1(d)).

(1) When there is a façade steel beam but no concrete cantilever edge strip, the moment capacity of the joint may include the contribution of the slab reinforcements provided that the requirements in **(2)** to **(7)** of this subclause are satisfied.

(2) Reinforcing bars of the slab should be effectively anchored to the shear connectors of the façade steel beam.

(3) The façade steel beam should be fixed to the column.

(4)P The cross-sectional area of reinforcing steel A_s shall be such that yielding of the reinforcing steel takes place before failure of the connectors and of the façade beams.

(5)P The cross-sectional area of reinforcing steel A_s and the connectors shall be placed over a width equal to the effective width defined in **7.6.3** and Table 7.5 II.

(6) The connectors should be such that:

$$n \cdot P_{Rd} \geq 1{,}1\ F_{Rds} \qquad \text{(C.1)}$$

where

n is the number of connectors in the effective width;

P_{Rd} is the design resistance of one connector;

F_{Rds} is the design resistance of the re-bars present in the effective width: $F_{Rds} = A_s{:}f_{yd}$

f_{yd} is the design yield strength of the slab reinforcement.

(7) The façade steel beam should be verified in bending, shear and torsion under the horizontal force F_{Rds} applied at the connectors.

C.3.1.4 Façade steel beam and concrete cantilever edge strip present (Figure C.1(e)).

(1) When there is both a façade steel beam and a concrete cantilever edge strip, the moment capacity of the joint may include the contribution of: (a) the force transferred through the façade steel beam as described in **C.3.1.3** (see **(2)** of this subclause) and (b) the force transferred through the mechanism described in EN 1994-1-1:2004 (see **(3)** of this subclause).

(2) The part of the capacity which is due to the cross-sectional area of reinforcing bars anchored to the transverse façade steel beam, may be calculated in accordance with **C.3.1.3**, provided that the requirements in **(2)** to **(7)** of **C.3.1.3** are satisfied.

(3) The part of the capacity which is due to the cross-sectional area of reinforcing bars anchored within the concrete cantilever edge strip may be calculated in accordance with **C.3.1.2**.

Sofort-Download-Beuth-Book Supply Bureau-KdNr.7066075-ID.SCBLGSA1OBPULJD3QN0TD2AJ.1-2016-08-02 13:22:06

SUPPLIED BY BSB EDGE UNDER LICENCE FROM DIN FOR RAJARAMBAPU INSTITUTE OF TECHNOLOGY - SANGLI DIST. VIDE BSB EDGE ORDER REGISTRATION NO. ORD01-1088 ON 02/08/2016

Sofort-Download-Beuth-Book Supply Bureau-KdNr.7066075-ID.SCBLGSA1OBPULJD3QN0TD2AJ.1-2016-08-02 13:22:06

C.3.2 Exterior column - Bending of the column in direction perpendicular to façade; applied beam bending moment positive: $M > 0$

C.3.2.1 No façade steel beam; slab extending up to the column inside face (Figure C.2(b-c)).

(1) When the concrete slab is limited to the interior face of the column, the moment capacity of the joint may be calculated on the basis of the transfer of forces by direct compression (bearing) of the concrete on the column flange. This capacity may be calculated from the compressive force computed in accordance with **(2)** of this subclause, provided that the confining reinforcement in the slab satisfies **(4)** of this subclause.

(2) The maximum value of the force transmitted to the slab may be taken as:

$$F_{\mathrm{Rd1}} = b_{\mathrm{b}}\, d_{\mathrm{eff}} f_{\mathrm{cd}} \tag{C.2}$$

where

d_{eff} is the overall depth of the slab in case of solid slabs or the thickness of the slab above the ribs of the profiled sheeting for composite slabs;

b_{b} is the bearing width of the concrete of the slab on the column (see Figure 7.7).

(3) Confinement of the concrete next to the column flange is necessary. The cross-sectional area of confining reinforcement should satisfy the following expression:

$$A_{\mathrm{T}} \geq 0{,}25 d_{\mathrm{eff}} b_{\mathrm{b}} \frac{0{,}15l - b_{\mathrm{b}}}{0{,}15l} \frac{f_{\mathrm{cd}}}{f_{\mathrm{yd,T}}} \tag{C.3}$$

where

[AC⟩ l is the beam span, as defined in 7.6.3(3) and Figure 7.7; ⟨AC]

$f_{\mathrm{yd,T}}$ is the design yield strength of the transverse reinforcement in the slab.

The cross-sectional area A_{T} of this reinforcement should be uniformly distributed over a length of the beam equal to b_b. The distance of the first reinforcing bar to the column flange should not exceed 30 mm.

(4) The cross-sectional area A_{T} of steel defined in **(3)** may be partly or totally provided by reinforcing bars placed for other purposes, for instance for the bending resistance of the slab.

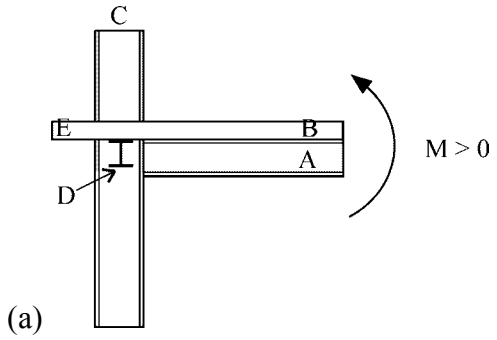

Key:
(a) elevation;
A main beam;
B slab;
C exterior column;
D façade steel beam;
E concrete cantilever edge strip

Figure C.2: Configurations of exterior composite beam-to-column joints under positive bending moments in a direction perpendicular to façade and possible transfer of slab forces

Sofort-Download-Beuth-Book Supply Bureau-KdNr.7066075-ID.SCBLGSA1OBPULJD3QN0TD2AJ.1-2016-08-02 13:22:06

SUPPLIED BY BSB EDGE UNDER LICENCE FROM DIN FOR RAJARAMBAPU INSTITUTE OF TECHNOLOGY - SANGLI DIST. VIDE BSB EDGE ORDER REGISTRATION NO. ORD01-1088 ON 02/08/2016

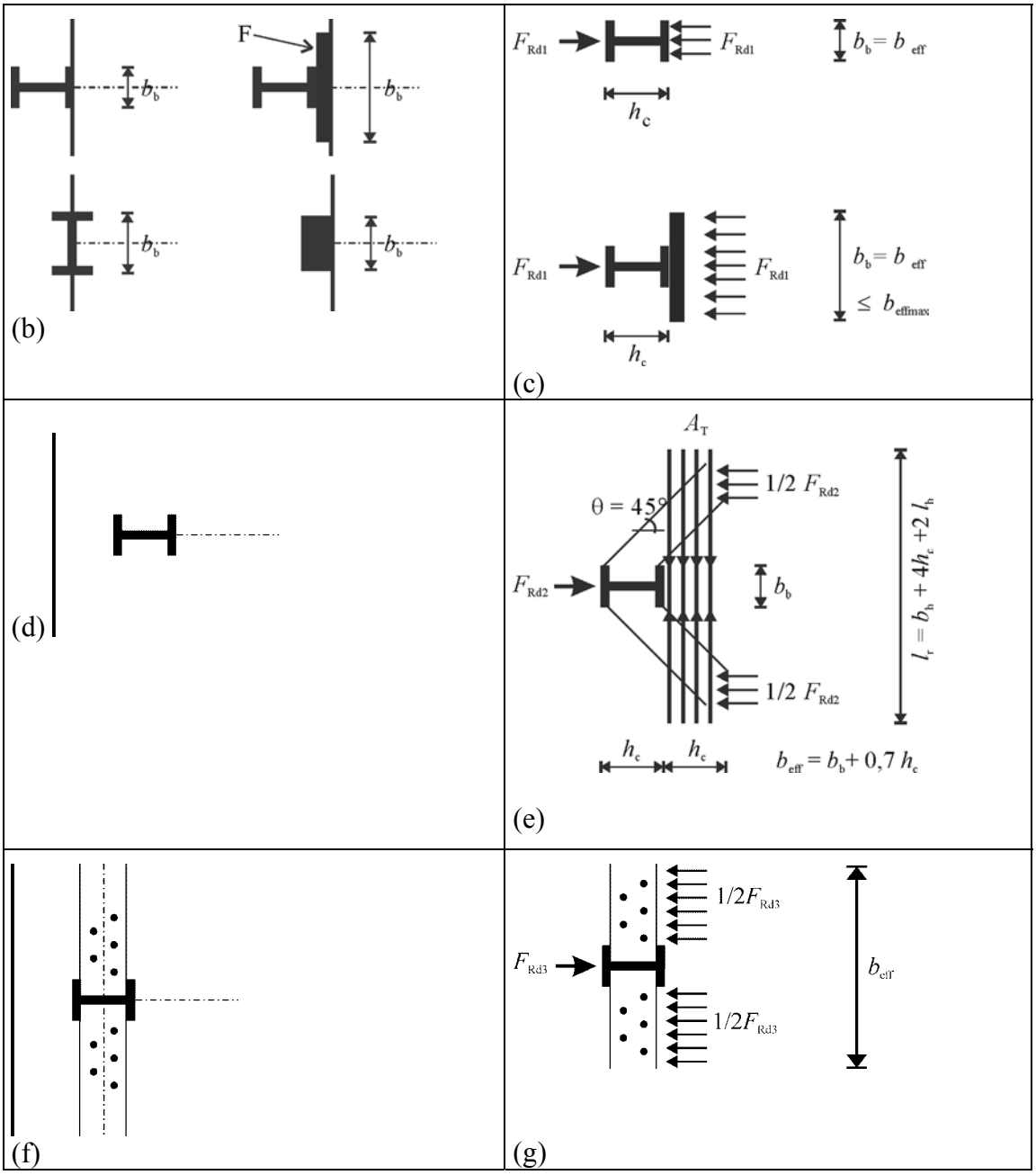

Key:
(b) no concrete cantilever edge strip – no façade steel beam – see **C.3.2.1**;
(c) mechanism 1;
(d) slab extending up to the column outside face or beyond as a concrete cantilever edge strip – no façade steel beam – see **C.3.2.2**;
(e) mechanism 2;
(f) slab extending up to the column outside face or beyond as a concrete cantilever edge strip – façade steel beam present – see **C.3.2.3**;
(g) mechanism 3.
F additional device fixed to the column for bearing.

Figure C.2 (continuation): Configurations of exterior composite beam-to-column joints under positive bending moment in direction perpendicular to façade and possible transfer of slab forces.

Sofort-Download-Beuth-Book Supply Bureau-KdNr.7066075-ID.SCBLGSA1OBPULJD3QN0TD2AJ.1-2016-08-02 13:22:06

SUPPLIED BY BSB EDGE UNDER LICENCE FROM DIN FOR RAJARAMBAPU INSTITUTE OF TECHNOLOGY - SANGLI DIST. VIDE BSB EDGE ORDER REGISTRATION NO. ORD01-1088 ON 02/08/2016

SUPPLIED BY BSB EDGE UNDER LICENCE FROM DIN FOR RAJARAMBAPU INSTITUTE OF TECHNOLOGY - SANGLI DIST. VIDE BSB EDGE ORDER REGISTRATION NO. ORD01-1088 ON 02/08/2016

Sofort-Download-Beuth-Book Supply Bureau-KdNr.7066075-ID.SCBLGSA1OBPULJD3QN0TD2AJ.1-2016-08-02 13:22:06

C.3.2.2 No façade steel beam; slab extending up to column outside face or beyond as a concrete cantilever edge strip (Figure C.2(c-d-e))

(1) When no façade steel beam is present, the moment capacity of the joint may be calculated from the compressive force developed by the combination of the following two mechanisms:

mechanism 1: direct compression on the column. The design value of the force that is transferred by means of this mechanism should not exceed the value given by the following expression

$$F_{Rd1} = b_b \, d_{eff} \, f_{cd} \tag{C.4}$$

mechanism 2: compressed concrete struts inclined to the column sides. If the angle of inclination is equal to 45°, the design value of the force that is transferred by means of this mechanism should not exceed the value given by the following expression:

$$F_{Rd2} = 0{,}7 h_c \, d_{eff} \, f_{cd} \tag{C.5}$$

where

h_c is the depth of the column steel section.

(2) The tension-tie total steel cross-sectional area A_T should satisfy the following expression (see Figure C.2.(e)):

$$\boxed{\text{AC}} \; A_T \geq 0{,}5 \frac{F_{Rd2}}{f_{yd,T}} \; \langle\text{AC}\rangle \tag{C.6}$$

(3) The steel area A_T should be distributed over a length of beam equal to h_c and be fully anchored. The required length of reinforcing bars is $L = b_b + 4\, h_c + 2\, l_b$, where l_b is the anchorage length of these bars in accordance with EN 1992-1-1:2004.

(4) The moment capacity of the joint may be calculated from the design value of the maximum compression force that can be transmitted:

$$F_{Rd1} + F_{Rd2} = b_{eff} \, d_{eff} \, f_{cd} \tag{C.7}$$

b_{eff} is the effective width of the slab at the joint as deduced from **7.6.3** and in Table 7.5II. In this case $b_{eff} = 0{,}7\, h_c + b_b$.

C.3.2.3 Façade steel beam present; slab extending up to column outside face or beyond as a concrete cantilever edge strip (Figure C.2(c-e-f-g)).

(1) When a façade steel beam is present, a third mechanism of force transfer F_{Rd3} is activated in compression involving the façade steel beam.

$$F_{Rd3} = n \cdot P_{Rd} \tag{C.8}$$

where

n is the number of connectors within the effective width computed from **7.6.3** and Table 7.5II;

P_{Rd} is the design resistance of one connector.

(2) **C.3.2.2** applies

(3) The design value of the maximum compression force that can be transmitted is $b_{eff}\ d_{eff}\ f_{cd}$. It is transmitted if the following expression is satisfied:

$$F_{Rd1} + F_{Rd2} + F_{Rd3} > b_{eff}\, d_{eff}\, f_{cd}. \tag{C.9}$$

The "full" composite plastic moment resistance is achieved by choosing the number n of connectors so as to achieve an adequate force F_{Rd3}. The maximum effective width corresponds to b_{eff} defined in **7.6.3** and Table 7.5 II. In this case, $b_{eff} = 0{,}15\ l$.

C.3.3 Interior column

C.3.3.1 No transverse beam present (Figure C.3(b-c)).

(1) When no transverse beam is present, the moment capacity of the joint may be calculated from the compressive force developed by the combination of the following two mechanisms:

mechanism 1: direct compression on the column. The design value of the force that is transferred by means of this mechanism should not exceed the value given by the following expression:

$$F_{Rd1} = b_b\, d_{eff}\, f_{cd}. \tag{C.10}$$

mechanism 2: compressed concrete struts inclined at 45° to the column sides. The design value of the force that is transferred by means of this mechanism should not exceed the value given by the following expression:

$$F_{Rd2} = 0{,}7\ h_c\, d_{eff}\, f_{cd}. \tag{C.11}$$

(2) The tension-tie cross-sectional area A_T required for the development of mechanism 2 should satisfy the following expression:

$$\text{【AC】}\ A_T \geq 0{,}5 \frac{F_{Rd2}}{f_{yd,T}}\ \text{【AC】} \tag{C.12}$$

(3) The same cross-sectional area A_T should be placed on each side of the column to provide for the reversal of bending moments.

(4) The design value of the compressive force developed by the combination of the two mechanisms is

$$F_{Rd1} + F_{Rd2} = (0{,}7\ h_c + b_b)\ d_{eff}\, f_{cd} \tag{C.13}$$

(5) The total action effect which is developed in the slab due to the bending moments on opposite sides of the column and needs to be transferred to the column

Sofort-Download-Beuth-Book Supply Bureau-KdNr.7066075-ID.SCBLGSA1OBPULJD3QN0TD2AJ.1-2016-08-02 13:22:06

SUPPLIED BY BSB EDGE UNDER LICENCE FROM DIN FOR RAJARAMBAPU INSTITUTE OF TECHNOLOGY - SANGLI DIST. VIDE BSB EDGE ORDER REGISTRATION NO. ORD01-1088 ON 02/08/2016

through the combination of mechanisms 1 and 2 is the sum of the tension force F_{st} in the reinforcing bars parallel to the beam at the side of the column where the moment is negative and of the compression force F_{sc} in the concrete at the side of the column where the moment is positive:

$$F_{st} + F_{sc} = A_s f_{yd} + b_{eff}\, d_{eff} f_{cd} \tag{C.14}$$

where

A_s is the cross-sectional area of bars within the effective width in negative bending b_{eff} specified in **7.6.3** and Table 7.5 II; and

b_{eff} is the effective width in positive bending as specified in **7.6.3** and Table 7.5 II. In this case, $b_{eff} = 0{,}15\, l$.

(6) For the design to achieve yielding in the bottom flange of the steel section without crushing of the slab concrete, the following condition should be fulfilled

$$1{,}2\,(F_{sc} + F_{st}) \leq F_{Rd1} + F_{Rd2} \tag{C.15}$$

If the above condition is not fulfilled, the capability of the joint to transfer forces from the slab to the column should be increased, either by the presence of a transverse beam (see **C.3.3.2**), or by increasing the direct compression of the concrete on the column by additional devices (see **C.3.2.1**).

Sofort-Download-Beuth-Book Supply Bureau-KdNr.7066075-ID.SCBLGSA1OBPULJD3QN0TD2AJ.1-2016-08-02 13:22:06

SUPPLIED BY BSB EDGE UNDER LICENCE FROM DIN FOR RAJARAMBAPU INSTITUTE OF TECHNOLOGY - SANGLI DIST. VIDE BSB EDGE ORDER REGISTRATION NO. ORD01-1088 ON 02/08/2016

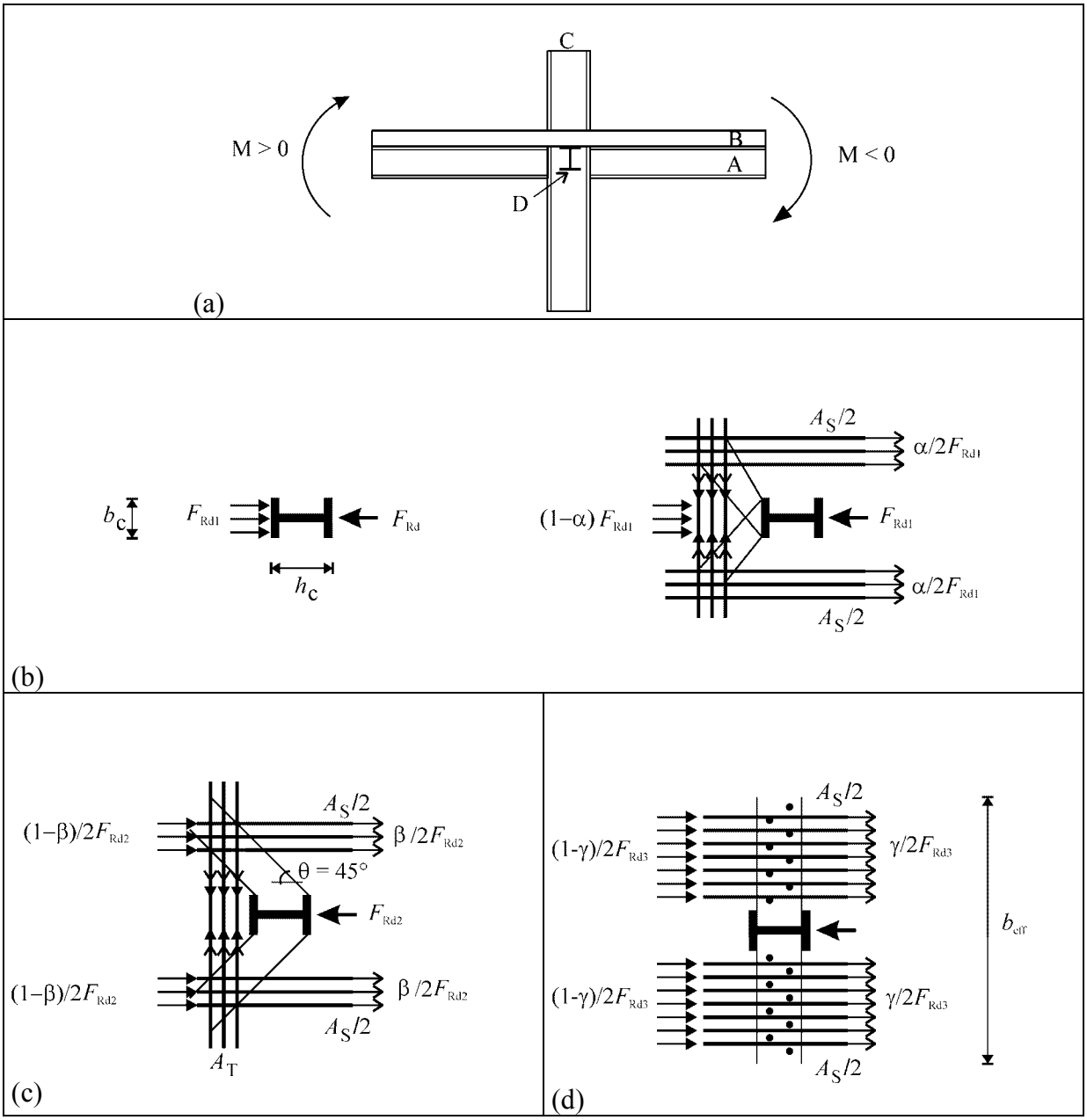

Key:
(a) elevation;
(b) mechanism 1;
(c) mechanism 2;
(d) mechanism 3
A main beam;
B slab;
C interior column;
D transverse beam

Figure C.3. Possible transfer of slab forces in an interior composite beam-to-column joint with and without a transverse beam, under a positive bending moment on one side and a negative bending moment on the other side.

Sofort-Download-Beuth-Book Supply Bureau-KdNr.7066075-ID.SCBLGSA1OBPULJD3QN0TD2AJ.1-2016-08-02 13:22:06

SUPPLIED BY BSB EDGE UNDER LICENCE FROM DIN FOR RAJARAMBAPU INSTITUTE OF TECHNOLOGY - SANGLI DIST. VIDE BSB EDGE ORDER REGISTRATION NO. ORD01-1088 ON 02/08/2016

C.3.3.2 Transverse beam present (Figure C.3(d)).

(1) When a transverse beam is present, a third mechanism of force transfer F_{Rd3} is activated involving the transverse steel beam.

$$F_{Rd3} = n \cdot P_{Rd} \tag{C.16}$$

where

n is the number of connectors in the effective width computed using **7.6.3** and Table 7.5 II.

P_{Rd} is the design resistance of one connector

(2) **C.3.3.1(2)** applies for the tension-tie.

(3) The design value of the compressive force developed by the combination of the three mechanisms is:

$$F_{Rd1} + F_{Rd2} + F_{Rd3} = (0{,}7\ h_c + b_b)\ d_{eff} f_{cd} + n \cdot P_{Rd} \tag{C.17}$$

where n is the number of connectors in b_{eff} for negative moment or for positive moment as defined in **7.6.3** and Table 7.5 II, whichever is greater out of the two beams framing into the column.

(4) **C.3.3.1(5)** applies for the calculation of the total action effect, $F_{st} + F_{sc}$, developed in the slab due to the bending moments on opposite sides of the column.

(5) For the design to achieve yielding in the bottom flange of the steel section without crushing of the concrete in the slab, the following condition should be fulfilled

$$1{,}2\ (F_{sc} + F_{st}) \leq F_{Rd1} + F_{Rd2} + F_{Rd3} \tag{C.18}$$

Sofort-Download-Beuth-Book Supply Bureau-KdNr.7066075-ID.SCBLGSA1OBPULJD3QN0TD2AJ.1-2016-08-02 13:22:06

SUPPLIED BY BSB EDGE UNDER LICENCE FROM DIN FOR RAJARAMBAPU INSTITUTE OF TECHNOLOGY - SANGLI DIST. VIDE BSB EDGE ORDER REGISTRATION NO. ORD01-1088 ON 02/08/2016